EDDA FLORA

M1:75 Best.Nr. 4.1200

www.bauer-modelle.com

Edda Flora
order.no 4.1200
Edda Flora is an inspection, maintenance & repair ship. It is specially designed for operation in northern waters.
During development, a high focus has been placed on excellent maneuverability and positional posture. The vessel has roll stabilization due to the drive with VSP.
The ship is built for the following main tasks:

- RED operations with module handling system
- Inspection and ROV operations
- Light construction
- RFO operations

It has the following features:

- Skidding system for 30 ton modules on main deck.
- LARS handling system for OBS-ROV and WORK-ROV.
- A Moonpool for MHS operations
- SCR catalysts for reduced NOX emissions in the air.
- DE-ICE notation, with covered mob boat, bow area and hangar area

Classification DNV, 1A1, SF, Comfort-C (3) -V (3), HELDK-SH, EO, DYNPOS AUTR (ERN 99/99/99/81), CLEAN DESIGN, NAUT OSV, ICE C, PMS, ISM, DE-ICE

IMO No.	9386380
Home port:	Haugesund
Shipyard:	Karmsund maritime AS
Owner:	Østensjø Rederi AS
Year of construction	2008
Flag of Norway	

DIMENSIONS	ORIGINAL	M1: 75
Length o.a.	95.0 m	1266mm
Length b.p.	82.2 m	1096mm
Breadth mld.	20.0 m	266mm
Depth mld.	9,8m	130mm
Draft max.	8.0m	106mm
Air draft	39.6 m over keel	528mm
TONNAGE - DEADWEIGHT		
Gross tonnage	6074 GT	14.39kg
Net tonnage	1822 t	
Deadweight max.	4696 t	

DECK LOADING CAPACITIES

Deck measurements	40 m x 19 m
Outside deck area	750 m^2

Inside deck area (hangar) WROV hangar 73 m².

OBS ROV hangar	36 m²
Deck cargo capacity	1900 t. 10 t / m²

PROPULSION

General Diesel electric propulsion plant. 2 x Voith Schneider, each 3800 kW. Type: VSP 36R6EC/300-2

Main engines	5 x Catepillar. Type: 3516 CTA. Each 2220 bkW, 1800rpm. Total: 11100 kW
Generator set	5 x AVK. Each 2100 kW, 690 V, 60Hz. Total: 10500kW

Horse power ration
2 x 3800 kW (Voith)
2 x 1400 kW (Bow thrusters)
1 x 1400 kW (Retractable Azimuth)

The model was designed in cooperation with Voith Turbo GmbH & Co. KG, Heidenheim and Skipsteknisk AS, Aalesund, Norway, Østensjø Rederi AS, Haugesund Norway from the original CAD data.

Required adhesives / tools

Article	**Type**	**hardening time**	**Order.No.**
MD-Megabond 2000/2030	2K-Kleber	5-7min	1551451-OK, 1551451-30
Epoxy 20min	2K Harz	24h	4.1001131
UHU acrylit	2K-Kleber	7-8min	763309
Eposeal SP 300, 0,5ltr		24h	4.300RHA.0,5
Grinding sponge grid 180			4.6100.180
diamond cutting disc			
diamond cutter			
Round File 3mm Cut 2			
Round file 8mm cut 2			
Flat file cut 2			
Drill 0.3mm 0.3-1.2mm 7.18200			7.18200
Hand Drill Chuck 4.6201, 4.6202			4.6201, 4.6202

Colors

	RAL	**Best.Nr.**	**International**	**JOTUN**
Under water	8012 read brown	4.324220	Antifouling, no number	Antifouling, no number
About water	2002 blood orange	4.324030	PHB168	436
Deck	6002 Laubgrün	4.324097	PHL549	137
superstructures	1003 signal yellow	4.324199	PHB168	1059
Bulwark inner	2002 blood orange	4.324030	PHB168	436
bollards	6002 leaf green	4.324097	PHL549	137
life rafts Exhaust gas and generator house	RAL9016 traffic white	4.324192	no number	no number
Logo, Strip	RAL9005 black	4.324311	no number	no number
Folding railing Backdeck	RAL7001 silvergray (stainless steel)	4.324128	no number	no number

Note on the etching parts:
Always bend towards the etched bend grooves to avoid breakage at this point. A passing over does no harm.

Instructions

hull

Draw the mounting rings of the VSP according to the drawing on the bottom of the ship.
Cut out the opening.
Insert the rings. Make sure that the projections of the rings to complete the outside flush with the ground. Possibly rework the GfK hull inside, not the rings.
The installation direction of the mounting holes in the ring does not matter.
We recommend the MD-Megabond 2000/2030 for gluing. A fast-curing, highly stable MMA adhesive for GfK (epoxy and polyester as well as ABS, polystyrene, wood, metals))
Apply the adhesive to the ring and insert it into the fuselage. Seal the gap between the hull and stanchion with glue.
secure the ring with clamps (min. 5-10) until cured.
Grind oozing adhesive from after curing with a smooth file.

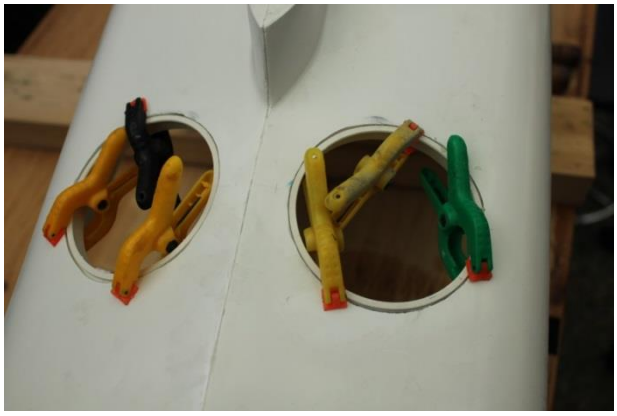

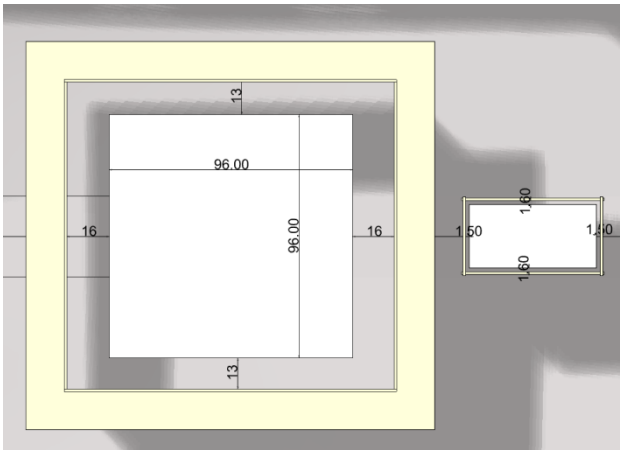

Moonpool

Draw the opening for the Moonpool on the outside of the fuselage as shown in the drawing. Dimensions see plan 02.
Cut out the bottom plate.
It was constructed an openable bottom plate.
Because of possible repairs and susceptibility in the original ship, the bottom plate was not installed, i. the hull remains open and the moonpool is closed only with the deck. Glue the Moonpool from the GfK parts according to Plan 02 together. Roughen the adhesive surfaces with an abrasive sponge and use as an adhesive MD 2000/2030. Pay attention to tightness. The upper flange 9 also serves as a deck support.

Sonar well

Mark and cut out the opening of the sonar well on the ship's bottom. Dimensions see plan 02. The cut out part can later be glued to the sonar body as a closure of the trunk. Glue the sonar shaft from the GfK parts according to plan 2.

Bow thruster / anchor bags

The openings of the bow thruster 4 and anchor pockets 3, mark and cut.
Glue the anchor bags together (UHU Allplast).
The anchor bags from the inside, sticking down flush with the openings. (MD 2000/2030, acrylite). Round off the lower edge from the outside.
You need two bow thrusters with Ø 33mm inside (Order No. 702094).
Draw the openings and cut them out.
Start with the front bow thruster.
Attach a discharge pipe to the bow thruster and insert it from the inside through a hull opening. Attach the other tube from the outside. Place the fuselage on a flat surface and level the bow thruster horizontally.
If necessary, rework a hull opening.
If it is horizontal, glue the exhaust pipes to the transmission housing of the bow thruster. To do this, coat the gearbox housing on the outside and the outflow pipes in the adhesive area evenly thinly with adhesive (UHU acrylit, MD-Glue).
Attach the pipe with slight turning movements. Wipe off the inside of the swelling adhesive.
Turn it vertically with the drive shaft and attach it with a few drops of super glue in the fuselage. Close the gap between the fuselage and the discharge pipe with adhesive tape from the outside.

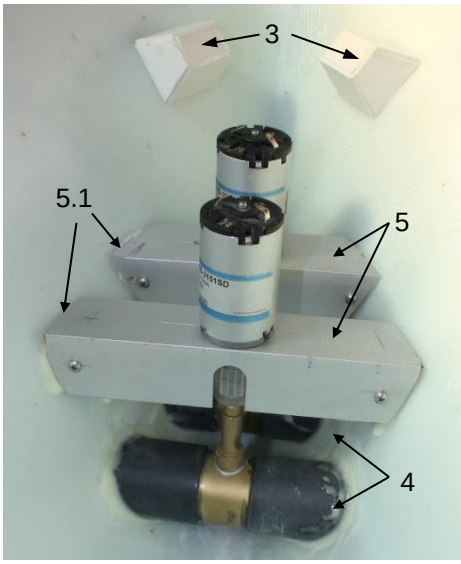

Stick from the inside (UHU acrylit or MD-Megabond). Do the same with the second bow thruster. After curing, remove the adhesive strips and glue the gaps between the outlet tube and the fuselage from the outside. Pay attention to tightness (closed adhesive seams).
Mount the PowerGrip coupling. Draw the motor mounting according to your motor on the aluminum bracket and drill the holes. Screw the motor to the bracket. Adjust the aluminum bracket to the inner wall. Screw pieces of wood into the corner and adapt them to the side wall. Put everything together and stick the woods in the hull. Do the same with the second bow thruster.
The front mounting screws of the aluminum bracket must be above the rear angle, so that both engines do not have to be dismantled during a repair.

Adjust the back deck.
The area of the helideck lies on the fuselage. Deepen the hull in this area by 3mm. The rear parallel part is glued between the side wall.
The dimensions can be found in the hull drawing plan 02.
Insert the deck into the fuselage and fix it with adhesive tape.
Beginning at the end of the helideck, stick the two 3x3mm strips 18 inside to the side of the ship.
Do not glue the back deck yet.
Open all engraved holes in hull,
such as scuppers, portholes and vents according to the engravings.
Note the height dimensions of the main deck in the drawing. Cut off the right side wall in front of the crane.
Note the dimension! See drawing side view plan 02.
Tip: Fix a thin steel ruler or similar under the portholes.
Drill the portholes to 6mm.

Use a round file Ø 7mm to file the portholes. The steel ruler serves as a stop for files.
From the 7mm aluminum tube cut 48 pieces to about 10mm length. Fit the pipe ends in the openings of the portholes. Let the pipes last about 1-2mm, depending on the slope of the side wall. The pipes should be glued horizontally. Stick with superglue and glue with Epoxy or Megabond from the inside.
Carefully remove the outer projection with a sizing file. Close cracks or gaps between pipe and hull with epoxy glue.
You can use a 6mm drill or other 6mm round material to align the tubes and adhesive aid.
Open the upper windows in the fuselage.
Behind these window openings, a continuous pane is glued after painting.
Tip: After painting the hull, close the pipes inside with adhesive tape and from the outside with epoxy apply a thin layer of glue as a disk. After curing, remove the adhesive strips.

Mount Moonpool 6-9 and sonar well 10 + 11
Glue the Moonpool 6, 7, 8 together with Epoxy or MD-Megabond. Slide the safety flange 9 above the Moonpool edge and place it with the flange on a flat surface and push the flange up to the base. The plates of the Moonpool and the flange must be flush with the top. Glue the flange to the outside of the Moonpool.
The flange 9 results in an additional deck support.

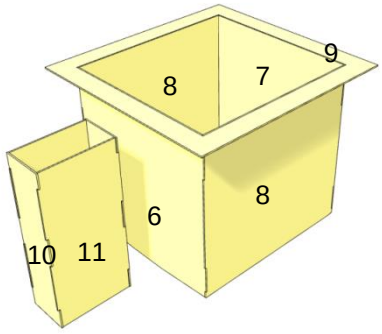

Glue together the sonar well 10 + 11, the pins are 0.5 mm above, so that it can be glued well inside and outside. The sonar well has no safety flange at the top, so stick it carefully.

Build the sonar body 15 made of metal or plastic. (Not included in the kit)
Halve the body lengthwise and glue it on both sides of the sonar support 12.
Tip: Drill an additional 1-2 holes and secure the sonar body to the support 12 with pins.
Insert the sonar into the shaft and check the movement by moving it. The sonar is pulled in and out by the winds above it.

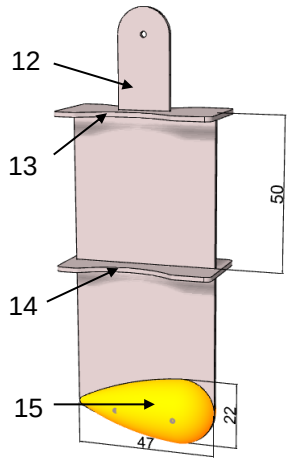

Deck support angle
Shorten the brass angles 16 to 540mm each.

Insert the main deck in the hull.
Put three strips 17 through the scuppers.
By suitable means e.g. Foam rubber, Styrofoam or similar push the deck up the ledges.
Mark inside the lower edge of the deck in the fuselage.
Insert the Moonpool. He should lie flat on the deck.

Due to manufacturing tolerances of the inner hull bottom, the Moonpool on the underside may need to be adjusted to the hull bottom.

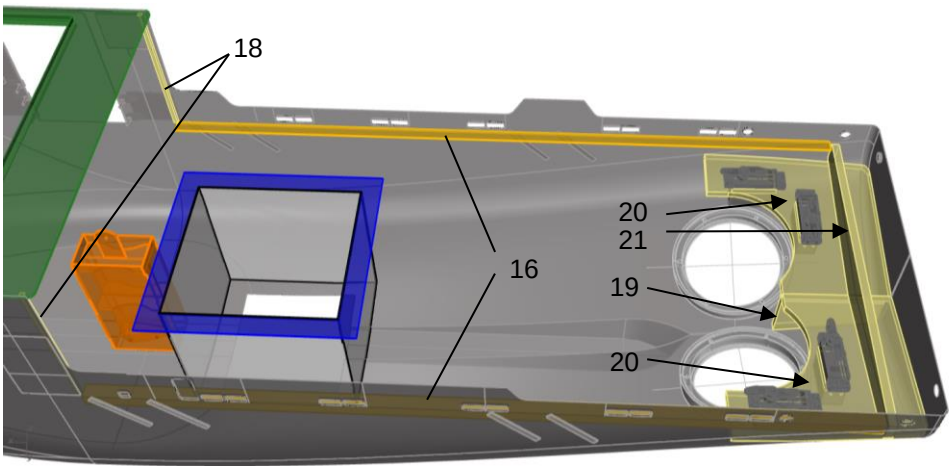

Remove the deck and glue the side brass pads to the mark in the hull.
Glue in the Moonpool and sonar shaft.
Roughen the Epoxy plates well in the gluing area.
Bonding inside and outside carefully perform.
Use MD2000 / 2030 or 20min as adhesive. Epoxy with cotton flakes.
Glue the servo holders 19 to 21 together.
To fit the servo holders into the fuselage, insert the Voith Schneider drives into the mounting rings. Check the distance between VSP motor and servo plate 20. The distance should be about 4mm, so that the screwdriver fits to screw in the VSP in between. If necessary, expand the servo holders in the area of the VSP mounting screws.
The servos may be max. 19mm over the servo plate so they do not touch the deck.
Use our servos 4.2530MD. For these, the servo plates are provided.

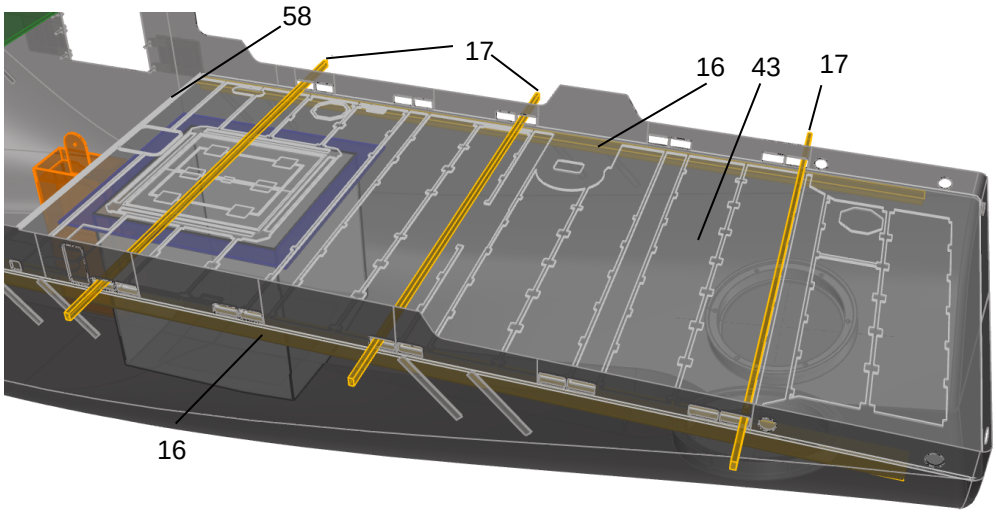

Cut the opening for the shaft 22 out of the hull. The corners remain rounded
R = 8mm
Stick the shaft 22 behind the cutout in the fuselage.
Cut the openings for the gangways 23 (left) and 24 (right) out of the fuselage. The corners remain rounded.
R = 1.3mm
Glue the gangway well 23 and 24 together. Insert two stops 25 through the openings and glue them in place.

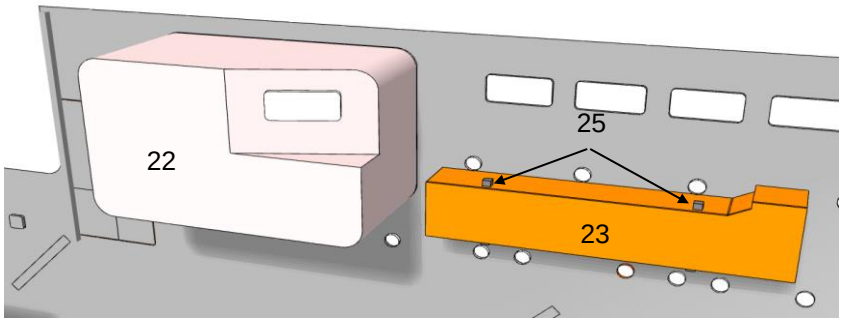

Stick the two gangway manholes into the hull behind the openings.
To prevent damage to the gangway, we recommend to build it later.
Details see page 14 and plan 02.
They consist of etched parts and are used after painting the model. They can be built to be fully functional. The mechanism to move the gangway is not part of the kit.

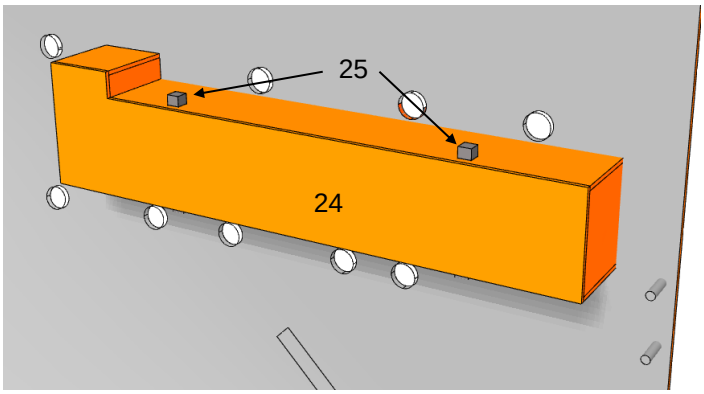

ROV door
From the outside, glue the hinges 28 into the openings of the doors 26. To align the hinges, insert the shaft 30 through the hinges. Smooth the back of the doors (protrusions of the hinges 28).
Glue the grids 27 to the respective doors 26. Fit the doors in the ROV section of the right fuselage side.
Mark and drill the positions of the eyebolts 29 on the fuselage (2mm).
Mount the eye bolts between the hinges with the shafts and insert them into the holes in the fuselage.

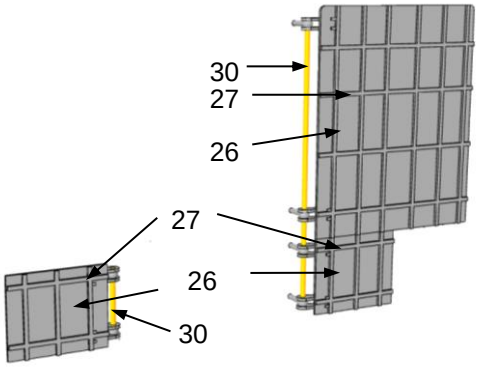

Insert the doors into the fuselage and secure with adhesive tape.
Cut the shafts 30 and insert them through the hinges for alignment.
Glue the eyebolts inside the hull from the inside. Use little glue as the ROV hangar is still glued between the eye bolts and the opening.
The door can be driven depending on your liking with the appropriate components.

First, build the ROV hangar, part 31. Before you glue it together, screw or glue the rails 34 for the ROV crane into the side plates. The dimensions are shown in the plan sheet 2.
Glue Hangar 31 into the fuselage behind the cutout.
The ROV crane will be built later and described on page 12.

The rubber fenders 35 on the hull are fixed in a U-rail.
Divide the U-profiles 34 for the Fender 35 into ten 48mm long pieces. Stick to the marks on the fuselage. You can secure the profiles with 1mm brass nails for a better grip. Pierce the profiles and the hull. Engage the nail heads and glue in the nails. Cut off the nails in the fuselage (danger of injury).
Glue the rubber into the profiles after painting.

foredeck

Remove the inner thin GfK part from the foredeck. It is not needed.
If desired, cut out the cutout for the front mast 39-42 from the foredeck.
The dimensions can be found in the plan view of the deck on plan 02. Glue together the mast 39 and the shaft 40 for the mast. With the shaft 42, the mast can be installed movable.
On top of the mast there is an all-round light (anchor light) underneath, the two front top lights (1x reserve), both lamps are warm white.

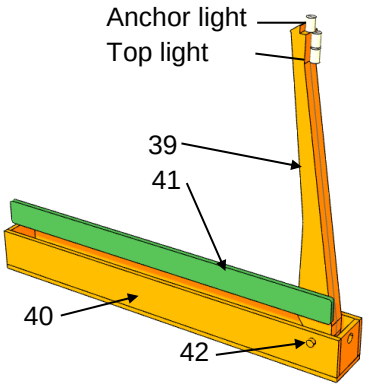

The hole in the front plate of part 40 is used for cable entry.
The cover 41 works on the original to the right.

In the glued area of the well, remove the foredeck reinforcement and glue the shaft under the deck opening.

Front deck assembly
Cut off approx. 2mm from the top of the helideck. as indicated in the drawing sheet 02
The deck rests on the hull in this area.
In the rear area, the deck is between the side wall.
Glue as a deck holder, the two 3x3mm strips 34 in the fuselage.
The foredeck is flush with the hull at the front and 4mm longer at the back.
Fit the back deck and glue it with epoxy. Close the top gap between the foredeck and the side wall with epoxy.
Sand the glue put on the deck upper surface smooth.
Glue under the helideck from the outside the reinforcements 38.1.
Plan 03 shows the drilling scheme for the foredeck stanchions.
It is best to cut out this drawing and fix it on the foredeck. Transfer the distances to the foredeck or drill through this template into the foredeck with the appropriate drills (0.5mm and 1.0mm).

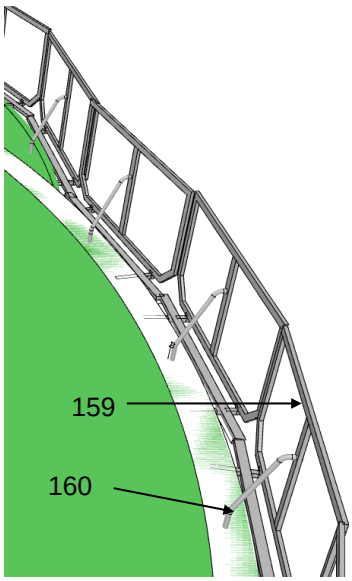

The red lines in the front indicate holes drilled laterally in the deck. Drill this with 0.8mm approximately 2mm below the top edge of the deck into the fuselage. There, the hinged in the original rail parts 159 are inserted. From above, the imitations of the hydraulic cylinder 160 (0.5mm brass wire) are plugged.
From the inside, glue the enclosed grid material 159.1 onto the railings and cut off the supernatant. Paint everything in light gray (stainless steel).
The railing 156, 157 and the railing parts 158, 159 and 160 are used after painting the hull and the deck.

Railing fore deck (fixed rear part)
The handrail is 0.8 mm brass wire, the passages 0.5 mm brass wire.
The railing is painted signal yellow on the entire ship in RAL1003.

Main deck
You can move the flaps of the Moonpool cover.
The red hatched area is the cutting line (see page 03).
The cutting line is laminated deepened in the deck.
Mark the positions of the bollards and the guard rail on the deck.
Also mark the holes for the crane.
Drill these with the appropriate diameters.
Prepare the wooden deck. Brush it twice from top to bottom with intermediate sanding with EPOSEAL. Sand smoothly with a 120 grit sanding sponge. Before the 2nd coat, remove the sanding dust from the laser cuts and engraving.
Remove the required part from the wooden plate. Separate the bars with a balsa knife and gently bend the plate back and forth.
Sand the excess EPOSEAL from the laser cuts and place the part in the appropriate part of the GfK deck. Check the fits. The wooden parts should be easy to insert.

Before gluing the wood parts, paint the gelcoat of the deck green.
The wooden parts are glued with superglue.
We recommend Rapid glue MD GLUE XTREME 2, medium viscosity or Zap-a-gap (green). This remains somewhat elastic and does not bend the deck in direct sunlight. This Rapid glue is solvent-free and does not bloom. Do not use an activator. This makes the CA glue glass hard.

Make the rear safety rail 44/45 next to the bollards. You can make these out of plastic or brass. Both materials are included. These parts are also included as 3D printing parts. The right rail is drawn on plan 03 (1: 1). The left is a mirror image.
You save a lot of work when using 3D printing parts 45. They only need to be smoothed. For installation on the deck, 1.0mm pieces of wire are glued into the lower holes.
The bollards consist of parts 46-49. The front bollards of the rear bollard pair and the bollards amidships get a cover with line eyelets part 48 (etched part). The bollard bodies are made by pasting each other by 3 parts 46. The bollards 49 sit concentrically on the bollards (see drawing).

The safety rails 44/45, emergency exits 50-52 and bollards 46-49 are painted in the color of the deck (green).
If you want to open the flaps of the Moonpool, you need two 13mm servos 4.DCS0925H. Screw the servos into the holders. The linkage levers are not part of the kit, but can be easily made from old servo levers or remnants of the 1.0mm GfK board.
The dimension is shown on the detail drawing.
For secure gluing, remove the Coremat reinforcement in the flaps and in the deck near the glue spots.
Stick the angle profile 58 under the front edge of the cover. The above projecting leg serves as a stop for the body rear wall 95.
Insert the deck in the fuselage.
Inner bulwark
Why inner bulwark? We considered how to get to the drive components and the area under the main deck.
Our simplest solution:
The inner bulwark is attached to the upper edge of the fuselage and can be removed completely in the event of a repair. Afterwards the complete deck and the rear wall can be removed. Now the whole back part of the model is open. The structure is the same for all inner bulwarks. For safety, the inner bulwarks can be secured to the GfK ship's side wall with an easily detachable adhesive. with FIXOGUM.

Fixogum is a transparent, water-resistant, rubber-like adhesive. One takes it e.g. as a photo adhesive. He is easily solvable again. Residues can be rubbed off.

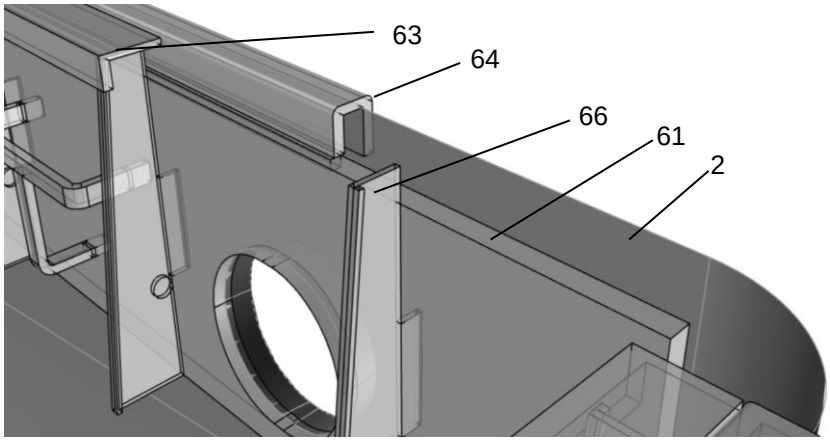

Place the inner bulwarks on the side wall on the deck. Check the height. For this, insert the end profile 64 onto the side wall. Possibly. you will need to remove slightly from the upper edge of the inner side wall 59. Depending on how high the brass angle and the deck is installed.
Adjust the parts of the outer handrails 64 to the bend of the side wall. Use a hot air blower for this purpose. Take care so that the profile does not melt or break. Adjust the miter cuts and glue the outer handrail in itself. Now place the inner bulwark on the side wall under the handrail 64 and staple both together. For complete bonding, we recommend removing the parts from the fuselage to avoid sticking to it. Make sure that the bulwark does not warp. In the area of the deckhouse on the crane, the handrail is interrupted.

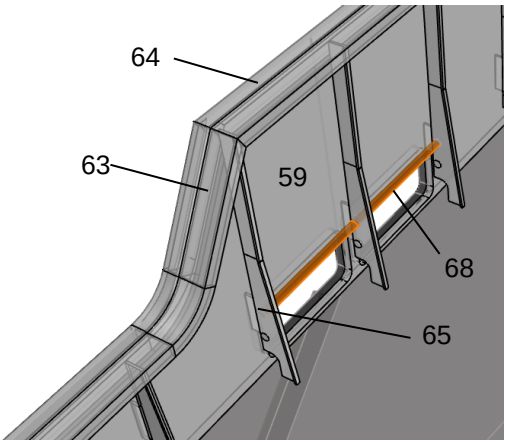

To glue the bulwarks, place the inner bulwarks on a flat, non-adhesive surface
Glue the bulwark supports into the slots of parts 59-62. Make sure that the plastic sheets do not bend when glued.

The stanchions are arranged in the etch plate in the order of installation. Over the scuppers the 3 stanchion are connected with 1.0mm brass wire. On these are attached in the original, the movable closure plates. Due to the size, we have no joints provided. However, the spout lids can be made from the laser parts of the inner bulwarks. We leave the scuppers open so that the passing water can drain.

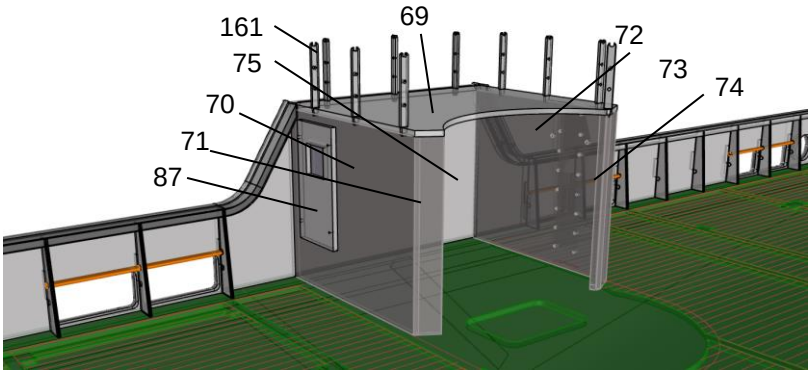

The crane substructure
Glue deckhouse 69-75 together.
Cut out the drilling template in the appendix and fix it to the tube 86 and work out the openings. The template is on the last pages of the manual.
Screw the driver 79 onto the winch 78.
Screw in the threaded rods 80 in part 84. Attach the crane base 86 and footplate.
In the area of the two 4mm holes on the underside of the deck, remove the Coremat reinforcement up to the GRP laminate.
Push through the threaded rods from above.
Fit the 4mm collars 83 and secure the parts with the M4 nuts 82. Secure the collars with adhesive on the deck. For later tightening do not stick the M4 nuts with them. Screw one nut onto the threaded rods and attach the prepared winch holder 77 with winch. Screw 1 nut M4 against the plate 77 from below. Insert the guide tube 81 through the head and foot plate into the driver 79. The guide tube should protrude at least 10 mm from the top plate. Adjust this projection with the two nuts on part 77. Adjust the cable opening to the cables used. She should point to the ship's center. Only connect driver 79 and guide tube 81 with a pin or glue after mounting the crane.
Tip: Harden the winch holder 77 in the area of the two 4mm holes with thin superglue or EPOSEAL.

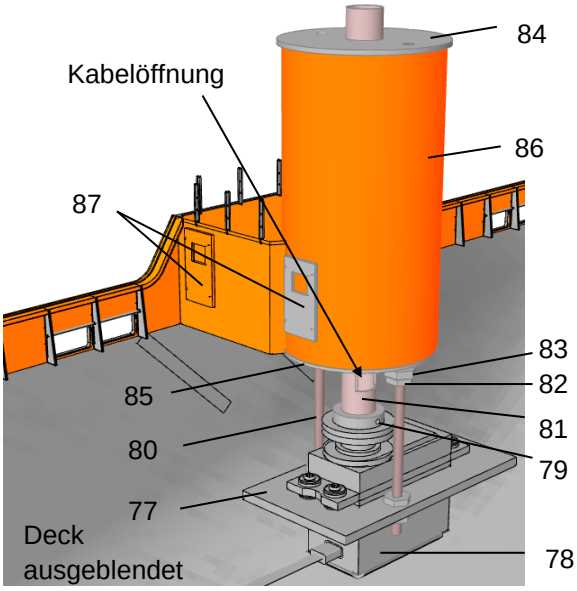

Lower crane platform (see plan 04)
From the lower platform 400 (etched parts crane), remove the 12 support brackets 401 and insert them from below into the slots in the bottom of the platform. All soldering or gluing. Turn the rail 90 ° upwards. Roll the cage 403 around a Ø10mm round wood or round metal. Turn the handrail to plan 4 according to the drawing. Cut the rail in the area of the cage and solder it to the upper tire of the cage. Solder the conductors 40 to the bottom plate and the lower tire. Paint everything signal yellow.

Holder for crane jib and crane hook
Glue the tube 90 onto the tube 88. Glue the parts 89 together to form a U and glue it onto the ring 90. For better grip of the ring in the area of the part 89 can be deepened something.
Glue a M2x10mm screw (not included) into the bottom.
Glue the bottom 88.1 into the tube 88. See plan 03. Screw the holder later in the deck.
In the bottom 94 glue a M2x10mm screw (not included). The floors stick in the pipes 92 + 93. The support can be screwed in the deck.
The two holders for the crane hooks have small funnels on top. These can easily be made by heating the pipe end with a hair dryer and expanding it with a circular round wood. Place the piece of pipe that is not to be expanded in one of the 6 mm holes in plate 7.

Rear wall

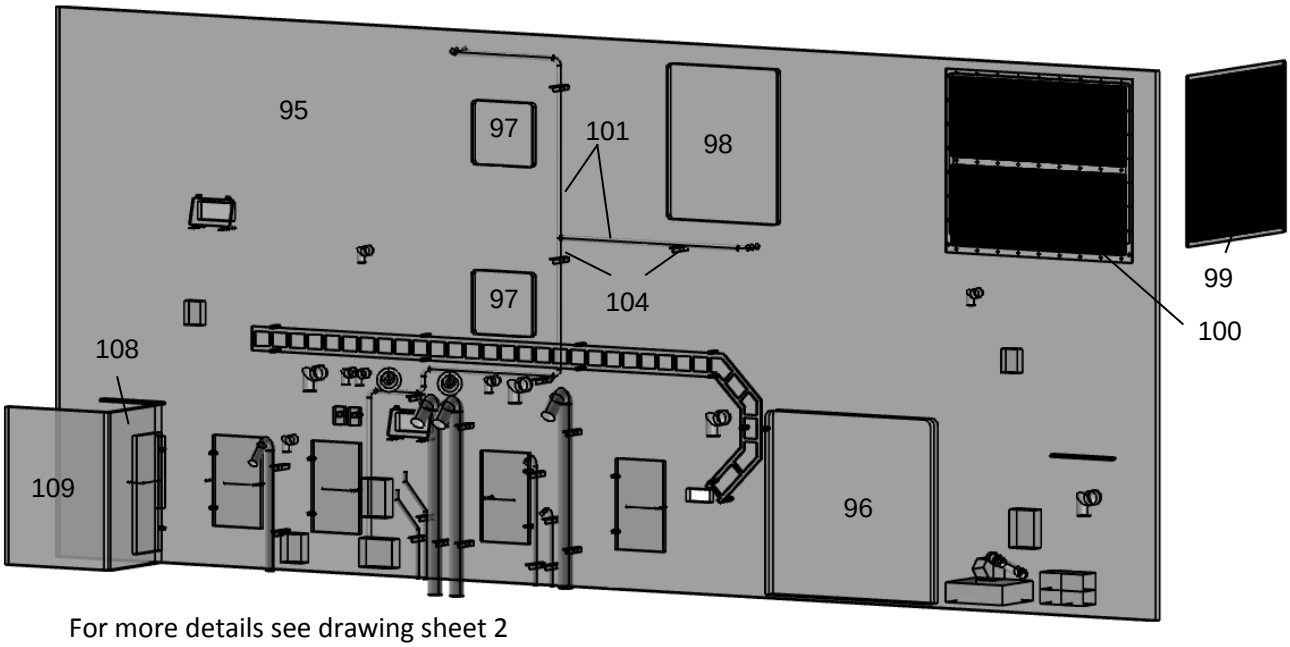

For more details see drawing sheet 2

The rear wall is not glued. It fixes the deck and is taken out to open the main deck.
First, bend the fire extinguisher 101 and solder or glue the two pieces together. Cut 6mm pieces from angle 104 each. They are used as tube holders. Altogether you need 19 pieces.
The ventilation pipes 111-115 have in the original closure plates. Due to the size we did not show them. All piping is 1mm from the back wall. The ventilation pipes are bent at the top approx. 135 °. The bent part is about 7mm long.
Bending the spacer of the cable tray 105 backwards toward the groove and insert this into the corresponding openings of the rear wall. It is only used after painting the back wall. The cable tray is in stainless steel colors (gray).

For the two fire extinguishers 103 each 2 parts are glued one above the other and painted red.
The two diesel taps 116 are formed according to the drawing and glued into the trays 102 and 119, respectively.
Glue the two walls 108 and 109 together and glue them in the back wall.
The doors 106 and 110 are provided with the pushers 107. Insert the rear protruding latches into the holes of the rear panel and glue them together.
Bend the remaining pipes and glue them to the holders 104. Glue the remaining boxes together and glue them in place.

Paint the rear panel signal yellow RAL1003. Insert the gray painted cableway 105 and glue it together.
The hull, as well as the inner bulwarks are now painted. Hue see above in the table.
Glue the 10 rubbers for the rubbing strips 125.
Paint the two fan grilles 99 and 100 gray and stick them on.

Cranes foredeck

The two rear cranes are built the same, only rotated by 180 ° mounted on the aft deck.

1.crane column

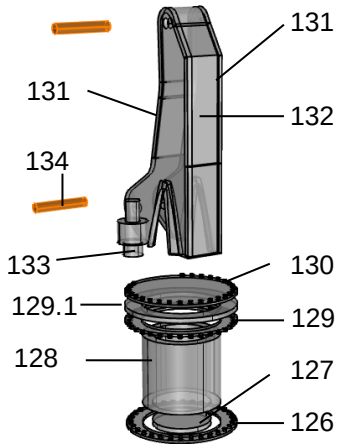

2. lifting arm

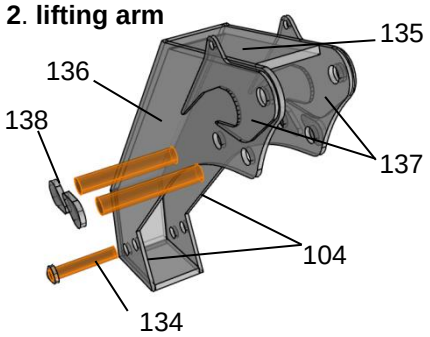

3. folding arm

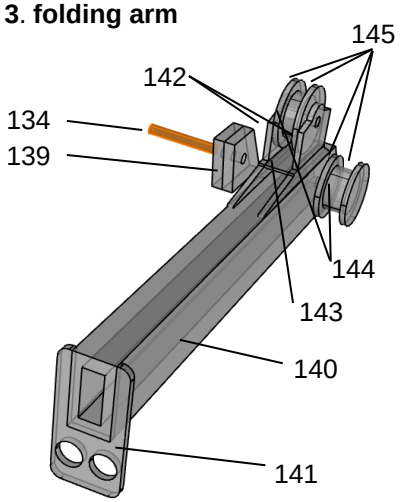

54. lift cylinder

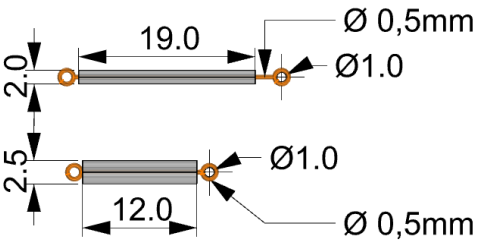

5. push cylinder

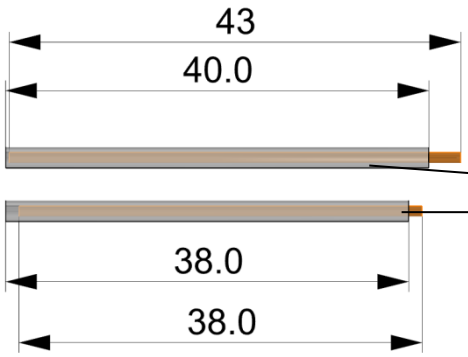

6. thrust arm

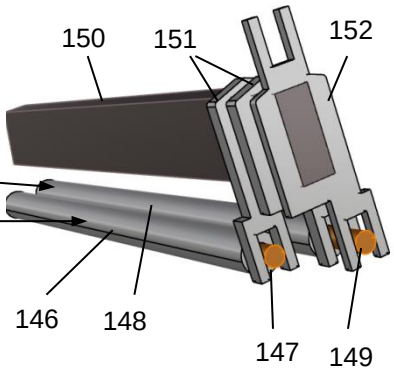

The two rear cranes
Assemble both cranes according to the drawings in the order of the numbers. With the hinge pin 134, the modules are mounted. The hinge pins are secured with the covers 138 against slipping out. The cylinders 146 and 148 are glued in part 141, the piston rods in the parts 147/149.
The crane is fully mobile. Glue a 1.0mm wire into the centering disc 127 and secure in the deck. The control panels also stick to the deck.

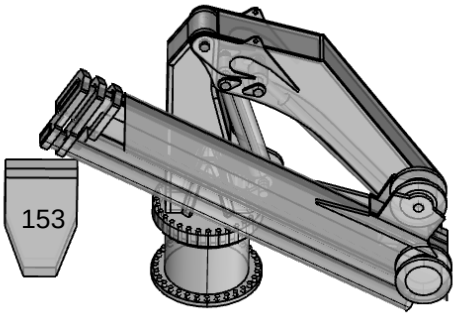

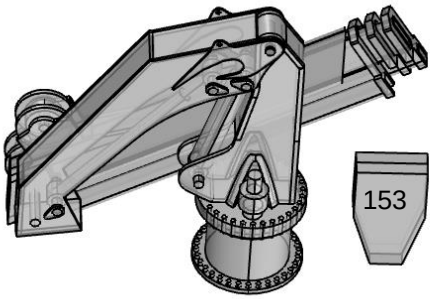

Front crane

This differs only by the upper turntable with the seat and control panel.
Instead of the upper turntable 130, the part 154 is used in this crane. Bend the part according to the picture opposite. Stick the seat 265 on the back, the operating panel 153 on the front.
Align yourself with the photos when painting.

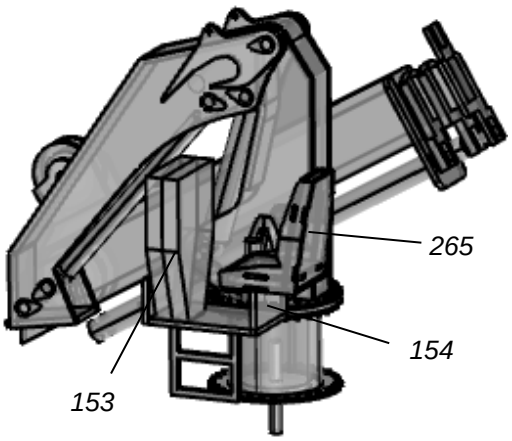

Crane for ROV

1.crane tray

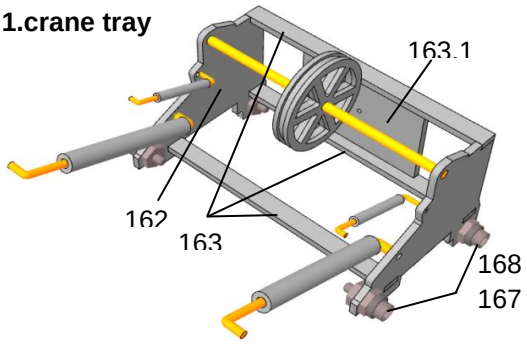

2. outrigger

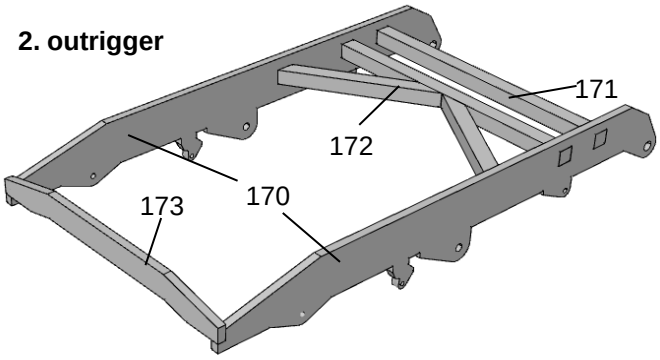

3.Waage

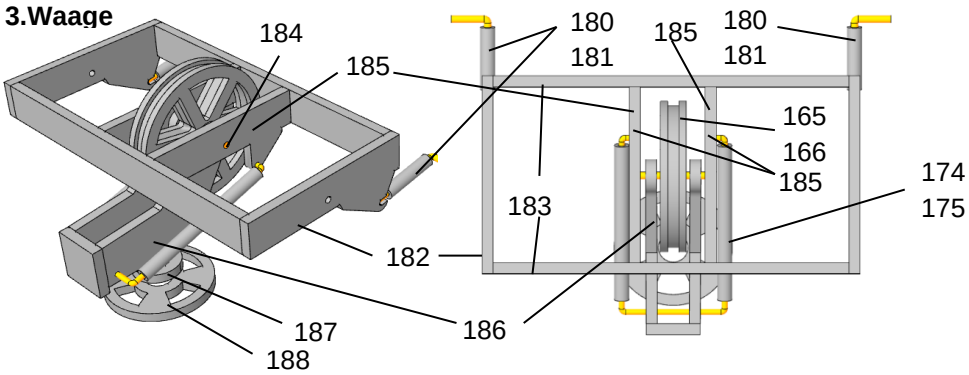

4.hydraulic cylinder

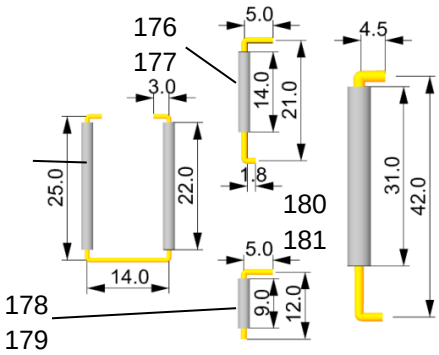

Plug the jib and cart together with shaft 164. The role of 165/166 should run centrally on the shaft. It could be positioned with short lengths of pipe on the shaft in the middle position. Fit all shafts 184 and hydraulic cylinders. Bend the wires of the hydraulic cylinders possibly after, so that the crane truck is horizontal
Assemble the ROV crane in the order of the illustrations and part numbers.
The crane is painted in gentian blue RAL5010. Push the ROV crane into the rails 34. The crane can be pushed out of the hangar with a threaded rod and geared motor. To do this, glue on a lower strut 163 a nut and guide the threaded rod through the back wall. The required dimensions can be found in the drawing, sheet 1. In Part 163.1, a threaded rod may be attached to push out the crane trolley. The drive is not described here and is not part of the kit. The WROV is not part of the kit. Depending on the tasks are different in use.

5.ROV-crane complete

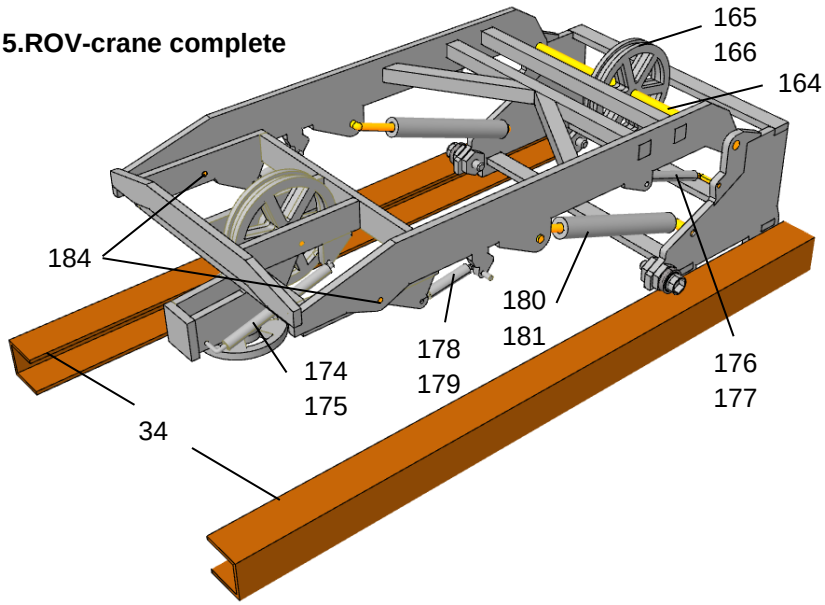

lifeboat

boat David

Glue parts 190 and 191 together to form a box.
Stick one side 189 right and left together and glue on top part 192 with 1.5mm overhang. Bend 1 additional part 189 and glue to the sides.
Make Hydraulic Cylinder 198-199 Glue the upper pivot bearing to the connector 190 in the center and secure it to the hydraulic cylinder with a 0.8mm MS wire 196. Bend the three lower pivot bearings and fasten them to the David arms 189 with wire 196.
Paint in RAL1003 signal yellow .

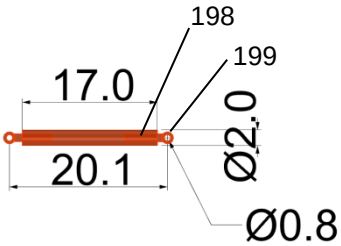

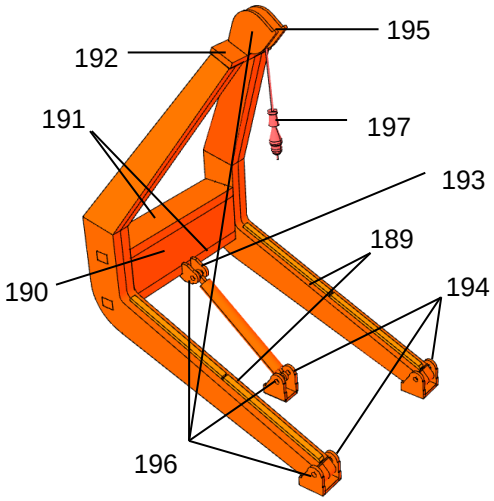

lifeboat

The boat 200 and the seat 201 are available as Resin parts.
The receiving device consists of etched parts 202, two shafts 204 and the closure 203.
Assemble everything according to the drawing on sheet 2 and the adjacent pictures.
According to the drawings, the boat can be further expanded. The drawings are 1: 1. Other parts are not part of the kit.
Paint in RAL1003 signal yellow.

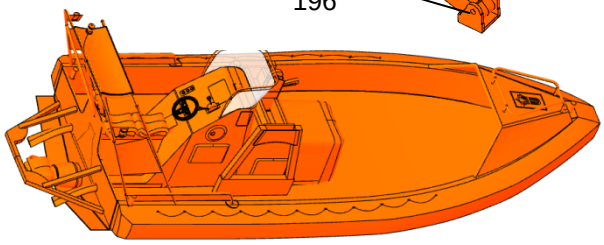

The David can be functionally designed and installed.
Glue the lower pivot bearings into the hangar of the lifeboat.
Dimensions see drawing.

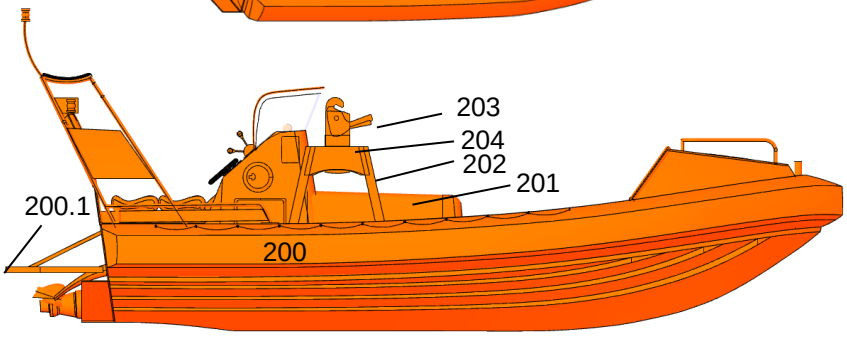

Platforms for life rafts

The platforms consists entirely of etched parts 205-212.
The podiums are built in mirror image.
For mounting on the model they are inserted into the slots of the rear wall and not glued there. You are only lying on the two bulwark supports. To remove the deck, the pedestals must be pulled out.

At the left pedestal, the cable path 105.1 is glued or soldered to the border 206/207. Over this cableway cables and hydraulic hoses for installed deck machines / cranes . Others are laid.
Thread the corresponding stanchions on the passages 216 and bend them piece by piece. Solder in the base plate 205. Bend the handrail, insert it into the supports and solder it.

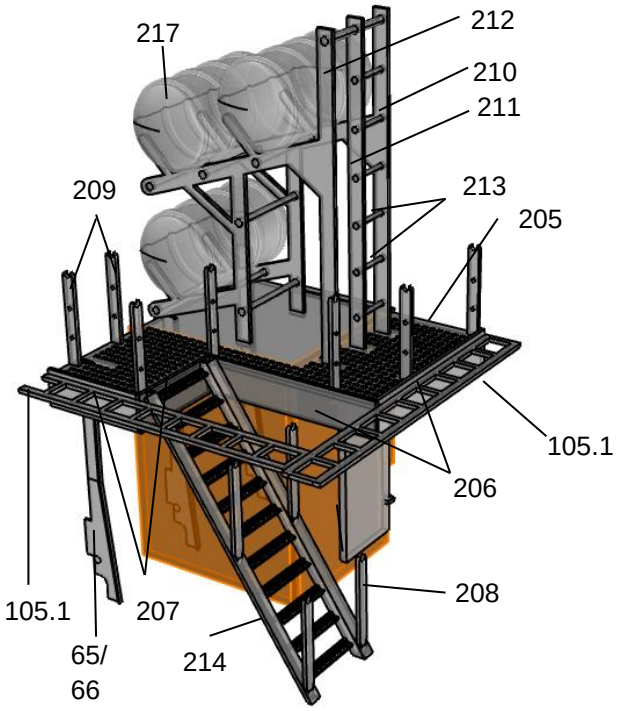

Tip:
If you use 0.5mm MS wire that is rolled up, you can straighten it easily.
This is how it works: Cut off the corresponding piece of wire. Pull it long and clamp one end of the wire in a vice, the other end in a cordless screwdriver or similar.
Gently clamp the wire and carefully turn the screwdriver a few turns. Smooth the wire by grasping the wire with your thumb and index finger and swiping it back and forth several times. It gives a directional wire.

<u>right platform for life rafts:</u>
It has no cable tray, but a support 218.
It is glued in the corner of part 206 inside.
The platform is also just stuck in the back wall.
To remove the main deck, it must be pulled out.
Both platforms are completely painted in RAL 1003 signal yellow.
The life rafts RAL 9016.

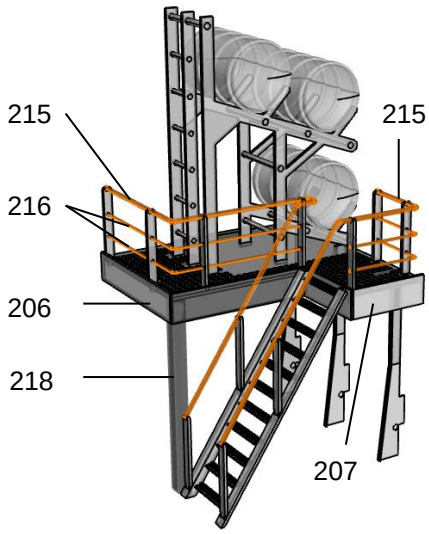

<u>gangway</u>
stairway
First bend the stair stringers 219 90 ° upwards. Insert steps 220.
Solder one level at the beginning and end and straighten everything out.
Put the stanchions 221 into the cheeks and brace the handrail 222.
The holes for the passages are 0.3mm. They cannot be etched larger, otherwise the stanchions will be etched away around the holes.
Therefore, re-drill the holes with a 0.3mm drill. Adjust the angle of the holes to the parallelism to the cheek.
The passages 223 are made of 0.3mm stainless steel wire. They must be left longer at the top as they are still pulled through the platform's stanchions.

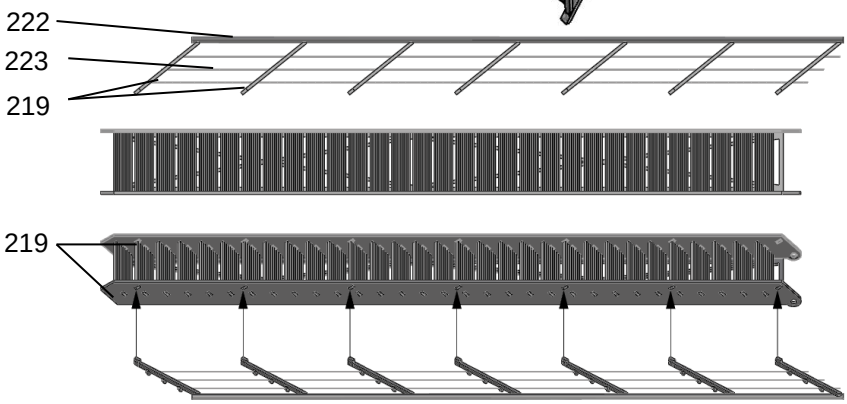

Platforms
Turn part 225 to a U.
Part 224 stuck on the pins and soldered from the inside.
Attention: The podiums 226 are built in mirror image for the two sides
In Part 226 solder the reinforcement 228 and the joint 227 from below.
Insert the stanchions 229 into the slots and solder them in place
Screw the platform 226 and the base plates 224 together with the M2 screws 230.
Tighten the nuts 231 far enough so that both parts rotate easily. Secure the nut.
With the shaft you connect stairs and platform. Secure the shaft against slipping out.
Put the bearings 233 and the gangway on the shaft 234. Insert the bearing journals into the cutouts of the gangway shaft and glue them together.
The gangway is stainless steel colored.
For further drawings see plan sheet 1.

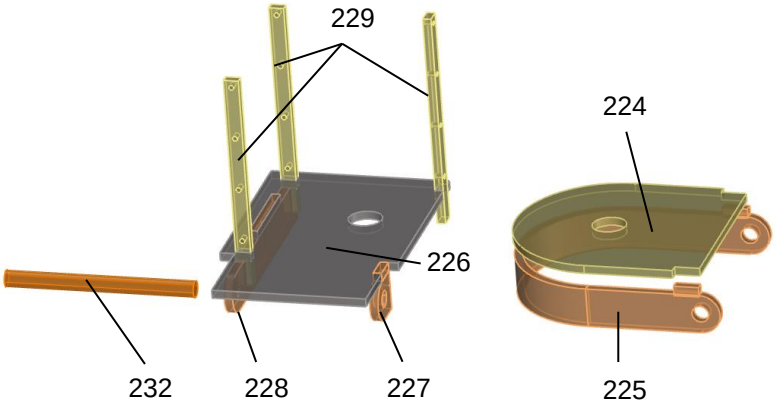

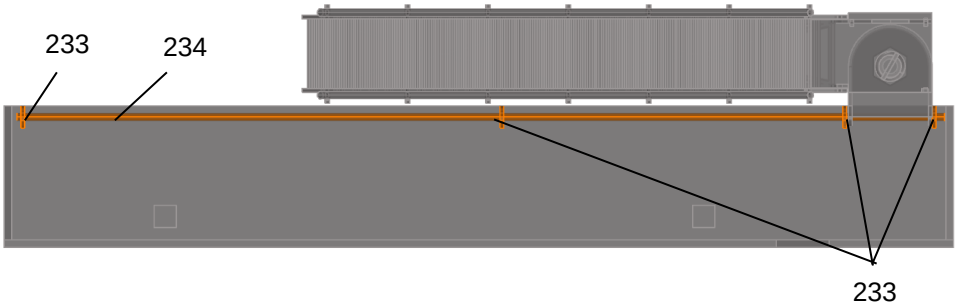

Attach the stickers on the hull. To do this, cut out the corresponding parts with the transfer foil. Remove carefully from the silicone paper and apply to the hull. Rub with a squeegee or a suitable object without sharp edges.
Remove the transfer film. The sticker can be overpainted colourless. The hull is finished.

Railing Backdeck

Now make the side rails of the back deck

Insert the pullthroughs through the railing supports 156. Insert into the holes in the deck and align. The railing can be soldered or glued with superglue. Finish the stern rail 158 in the same way. For the correct stability insert the handrail on all railing supports and solder. The railing is signal yellow RAL1003.

Superstructures, detailed drawings can be found on Plan 03.

Glue the 3D printed corners 240 to the side panels 237 at the front. Glue the rear panel 239 to the side panels 237.

Glue the inner D-deck 241 between the side and rear sections. Do not yet remove the inner part from part 241. It serves for stability. Pay attention to the engraving "top" in part 241.

At the height of the rear corner of pressure part 240, glue the pine strip 241.1 upright under or onto the D-deck. This strip prevents the deck from bending when the front part 238 is glued.

Glue the front part 238 to the body corners and the D-deck.

Glue the front entrance from parts 242 - 246 together and glue it behind the front wall.

Place the assembly on the deck and adjust the lower edge of the corners 240 to the wall of the back deck.

Glue the rear staircase 247 - 250 together and glue to wall 239.

The window panes 260 of the conference room are drawn off and cut out by placing part 252 on the smoke-coloured 0.3 mm plastic sheet. They cannot be laser cut because they are made of PVC.

First, glue the bottom wall 258 vertically to the floor 257. Place a heavy weight on the floor to prevent it from warping. Secure the wall in the vertical position with adhesive strips and heavy objects.

After the adhesive has cured, glue the window wall 252 to the lower wall. Secure with adhesive tape.

Glue and paint the tables 261 / 262 and 263 / 264 and the seats 265 / 266 together.

Paint the outside of the conference room with signal yellow RAL1003. The floor and the table are mahogany brown, the seats light brown.

Glue the pane 260 behind the wall 259.

Cut out the inner part of part 241. Glue in the walls 254, 255 and 256.

Glue the reinforcement 272 under deck 271. Glue the deck to side panels 237, 238 and 239.

Glue the two junction plates 273.1 to the front wall in the cutouts.

Insert the face plate / wave breaker 273 into the resulting throat of deck 271 / superstructure wall 238. Secure with adhesive tape and glue on. Allow the adhesive to harden. Then remove the area of the face plate between the gusset plates.

Fill any gaps in the adhesive seam with adhesive, not with spatula.

Paint the outside of the superstructure signal yellow RAL 1003, the deck green.

Bend and paint staircase 274. Glue 238 into the front wall.

Paint the D-Deck 253. Tread green RAL 6002, the rest signal yellow RAL 1003.

Paint the fan grid 267.1 signal yellow and glue it to the rear wall.

Glue the rear deck 253 to the rear wall 239. Apply the adhesive only into the openings of the rear wall or from below to avoid smearing the paint.

Slide the complete component of the conference room on deck 235 into the rear wall. Insert the railing into the holes on the right side wall.

Make the railing from the stanchions 268 handrail 269 and pull-throughs 270 in the usual way. In the front area the stanchions 268.1 are used. The railing is signal yellow. Gluing into deck 253

Bend the staircase 267 and paint it signal yellow. Glue in the stair 267.

The wheelhouse, drawings see plan 03

Important: Use the enclosed MD 2000 adhesive to glue the GRP window walls and floors together. Only this adhesive holds the walls and floor together. Other adhesives do not withstand the tension of the material.

The window panes 280.1, 281.1 and 282.1 of the wheelhouse are drawn off and cut out by placing parts 280, 281 and 282 on the smoke-colored 0.3 mm plastic plate. Shorten top and bottom by 1mm each, as the floor and ceiling are still glued inside.

Glue the walls 280, 281 and 282 together from the outside with adhesive strips. Press in floor 279. Fix the side walls to the floor in the corners from the outside with adhesive strips. Place the component in the adhesive template 283.

Apply adhesive to the inside of the floor - wall throat. Weight the floor against distortion. Glue the walls 281, 282 and 283 together from the inside.

At the top, the inner covering 303 can be inserted for alignment and fixed with adhesive strips (not yet glued).
You can place a flat board or similar with a weight (e.g. book) on the assembly. The assembly aligns itself and distortion is avoided.
Allow these glued areas to harden well.
Manufacture both door assemblies 284 - 287 and glue them behind the cut-outs of the wall 280. Insert the inner ceiling 303 again until the adhesive has hardened and fix it.

In the meantime, you manufacture the interior parts 291 to 300.
The color of the interior: (detailed coloring see pictures CD)
Paint the wheelhouse. Glue in the windows. The columns can also be used as cable ducts for the lighting.
Use our SMD LED with CU magnet wire (article no. 1.1101 to 1-1105 and 1.1116) for position lighting.

<u>top deck</u> (pictures of the top deck see CD)
Paint the top deck 304 Leaf green RAL 6002. Allow to dry thoroughly. Cover with masking film. Leave about 2mm from the edge free of masking film.
Connect the 3 parts of the bulwark 305, 306 and 307 from the outside with adhesive strips. Fix in the corners from the outside with adhesive strips on deck 304. Place everything in the adhesive template and weigh it down again with a straight board until it hardens. The different angles and an even height of the bulwark will automatically be adjusted. Put a few drops of glue into the throat and let it harden well. Then remove the adhesive strips and glue everything together completely.
Do not use too much glue. This can distort the bulwark. We recommend UHU plast special (article no.: 763206).
Paint the bulwark yellow. Then remove the masking film from the deck.
The data recorder 309 / 310 is made of ABS round material. Round both ends of part 309.
Glue centrally to part 310. The data recorder is blood orange RAL2009, the foot signal yellow.
The Windsock The feet of the windsock and day signal mast are the same. Solder or glue the 3 support plates 312 at the bottom. Let the feet 311 stand out approx. 1.5mm at the bottom, grind out 2.5mm deep at the top, so that the mast can be inserted. The brass wire 317 serves as the joint.
Glue the two parts 316 on top of each other, bevel the sides and glue to the mast 315.
The windsock (red) is not included. The lamp head 316 carries a red signal lamp.
The windsock is only mounted during heli landings, the mast is erected and the red signal lamp is switched on.

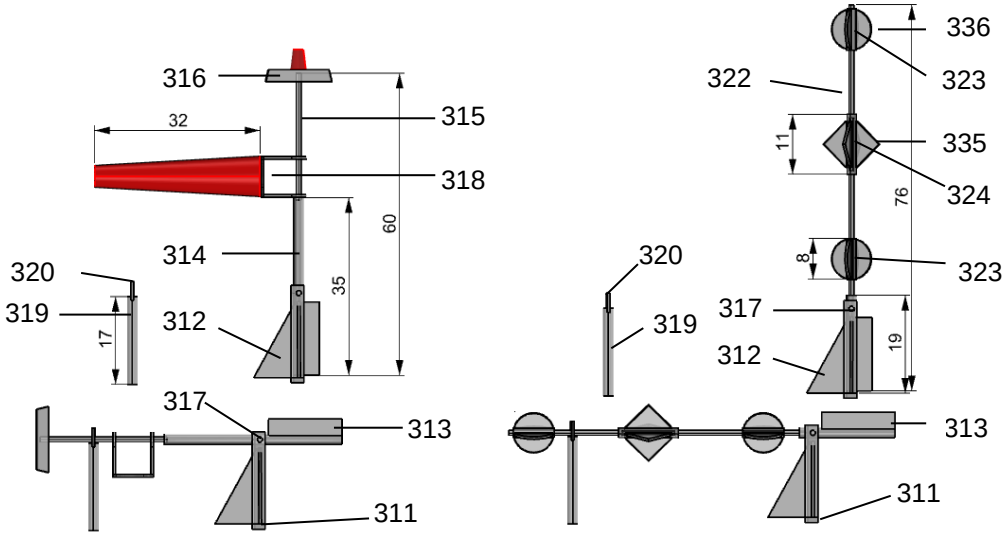

day signal
A soldering template is included on plate 5. Insert the tubes323 / 324 into the hole and the 4 parts 335 or 336 into the slots and solder them. Slide onto the wire 322 at an even distance and glue. Drill a hole for the joint through the tube 321 with 1mm. Solder/glue the support 320 into the support 319.
Except for the black tag signals themselves, everything is painted signal yellow.

Signal lamps RAM (restricted in their ability to manoeuvre) **Underwater work**
The two lamp holders are built as mirror images and are located on the outside of the top deck.
As a lamp you can cut plastic round into 2,6mm pieces, paint them and glue them to the lamp holders.
Original dimensions of the lamps (M1:75): height= 2,6mm, Ø 2mm
You can also directly paint and glue our SMD-LED with cable article no. 1.1101(red), 1.1103 (green) or 1.1116 (warm white).
It lights up in each case:
- two red round lights vertically on top of each other to indicate the side where the obstruction exists; NUC(not under command)
- two green round lights, vertically one above the other, to indicate the passing side for another vehicle.

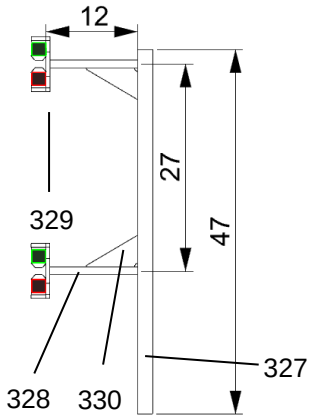

Signal Lamps Manoeuvring obstructs, RAM
Drill the holes for the 11 step irons 332 with 1mm and 4mm distance, as well as the holes for the supports 333 and 335.

Bevel the supports 333 and solder them together at an angle of 30°. Solder both supports into the mast. The step irons 332 and the lamp holders 336 can be glued with superglue.
The lamps 337 and 338 can be made of 2mm ABS-round and painted in the corresponding color. All masts are signal yellow.
You can also directly paint and glue our SMD-LED with cable article no. 1.1101 and 1.1116 red or white.
Glue the four lamp poles into the top deck only after completion.

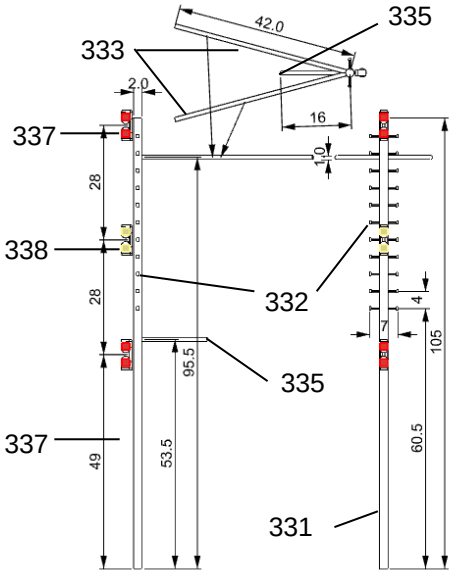

Railing
Since the railing is mounted in the angle of the bulwark, these supports 304.1 have an oblique pin. They only have a handrail made of 0.8mm MS wire. The railing is signal yellow like the bulwark.

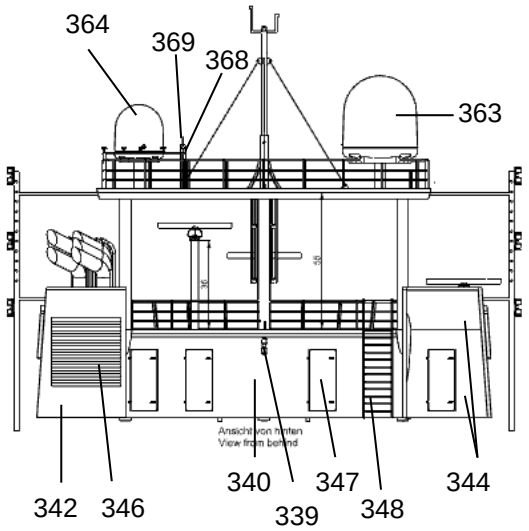

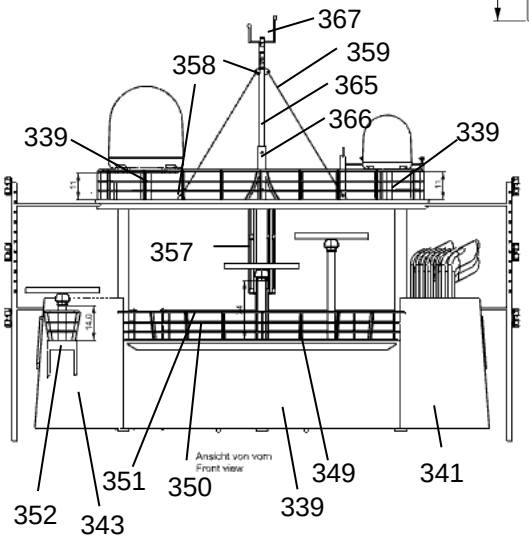

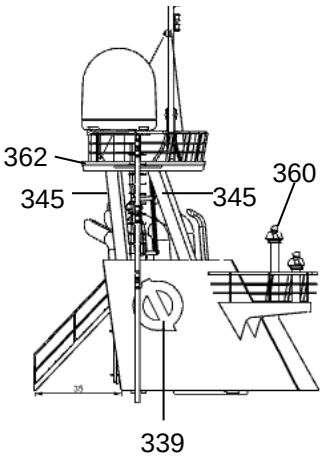

Glue the rear panels 340, 342 and 344 to the back of the bridge parts 339, 341 and 343.
Grind the semicircular guides for the 345 pipes so that the pipes fit in half easily.
To test, staple all three 3D print parts together with staples.
When everything fits, glue the 3 parts 339, 341 and 343 together. The lower edges should have a height.
To fix, insert the tubes 345 into the resulting holes.
Remove the tubes again and grind the front of the pressure parts 339, 341 and 343 smooth with a file.
Do not use rotating abrasives such as Dremel or similar. The resulting heat will cause the surface to become uneven and smeared.
For smoothing use a sanding sponge K120 (article no.: 4.6100.120) and primer (article no.: 4.323502).
Stick the doors 347 on.

Make the front railing 349-351 . Build the stairs 348 and the rear railing 349-35. Glue the radar support 352. Finish the railing for the radar support. Bend and glue the various exhaust pipes 353-357. Make the radars from the remains, see drawing plan 04.
Paint the whole part signal yellow, the decks leaf green, generator and exhaust house traffic white with black stripes. Paint both Østensjø logos black and glue them on the sides. The prints from the decal sheet can also be used. Dimensions see plan 04.

Crane HYDRAMARINE
The crane can be built fully functional. You can install the drives immediately or later after completion of the crane. Nothing needs to be changed on the crane itself. Only the lower plate 480 should be glued with a removable adhesive, e.g. Fixogum. This must be removed to mount the articulated arm drive. This plate is also removed for any repairs to the geared motor.
The reel 394 is only glued to the upper crane tube 395 instead of the two middle bearings 425 if the middle cylinder for the crane drive is not used.
Glue the paper template around the upper crane tube and work out the openings. Work the upper edge as well.
Push the upper crane bearing 395.1 into the tube and glue 42mm from below into the crane tube 395.
Bend the crane cab 404 together from the etched parts. .
Make the panes from the remains. One of the seats 265 can be installed. Paint the house then insert the discs.
Make switch cabinet 408 and air conditioner 407 by gluing together the corresponding plates. The air-conditioning block is bevelled at the back.
The bearings 425 and 426 must be removed from the inside of the crane tube, as the pivot bearing 427 will be glued into this position later.
If the geared motors are to be installed, provide appropriate cable bushings, also for any limit switches, or pull the cables in at the same time.

Platform of the crane operator's cab
Cut the 4 double T-beams 410-412 to size. Insert the 411 and 412 into the tube 395 and place the platform 400 on top. Fix the platform at two points with solder. Solder the T-beams 410 also under the platform.
Cut the brackets 413 to size and solder them between the T-beams under the platform.
Bend and solder the safety cage from the 1.0 and 1.5mm MS wires.
Bend the railing and solder it into the platform. See drawing Plan 04.
Roll the safety cage 420 around a 10mm round material.
Solder the ladder 419 into the cage.
Glue the cage to the crane tube.
Glue the two railings 421 and 422 onto the cover 398.
Glue the 4 spherical plain bearings 399 into the slots of part 396 and 397. To align, insert the bearing tube 424.
Glue the 4 bearings 426 for the support into the tube. To align, insert a 2mm wire into the holes.

Hydraulic/compressed air tank platform
Insert the two longitudinal beams into the tube 395 and solder the platform 430.
Cut the cross members 429 to size and solder them under the platform according to the drawing.
Solder the railing parts with the shoulder to the side of the platform. Bend and cut to length the pullthroughs and handrails accordingly. Connect to the adjacent railing parts.
Cut the hydraulic cylinders 433 to size and round them off at the top and bottom. Cut the imitated connections 434 to size and glue them into the bottles at the top and bottom with a projection of approx. 0.8 mm.
Glue the bottles into the retaining plates 435 according to drawing on plan 4. Glue the support 436 between the bottles under the retaining plate.
Glue the X-strut 437 onto the platform.
Paint the entire platform signal yellow.
Cut the 5 radiators 431 out of 1,5mm ABS rests yourself and stick the profile plate 431.1 on them. The two profile surfaces are grey, which the radiators paint signal yellow on the front surfaces.
Glue the radiators to the platform.
Finish the two struts 438 with the fixing straps 439. Paint signal yellow and insert between the brackets 426 and fasten with M2x8 screws or 2mm MS wires.
Fabricate the supporting structure from parts 440, 441 and 442 according to the drawing on plan 04.
Glue the lugs 445 into the plate 444.
Insert the girders with the longitudinal girders 440 into the crane tube.
Connect the struts 438/439 with the brackets 445.
Align at right angles to the crane tube and glue the plate 444 to the longitudinal beams 440.
For further removal, the entire part can be pulled out of the crane tube. To do this, loosen the struts again.
Glue or solder the platform 446 congruently to the beams 442.

Glue the carrier plate 447 to the platform 446.
Glue the winch foundation 448 with the holes congruently to plate 447.
The winch can be built with or without gear motor. The crane drive set 4.1217 contains 3 geared motors, 1 coupling, 2 lifting cylinders and three controllers. It is supplied with order no. No. 4.1217 is available as an extra assembly and not part of the modular system.
As a driveless winch, only use the 3mm holes in the winch bearings 451-453 and the reel parts 456, 457, 459 and 460.
Remove the small ring in parts 457 and 459 and glue the drum 458 in place. Glue the inner parts of the inner reel into the drum. Pay attention to the squareness so that the reel runs round. Glue on the outer reel parts 456 and 460.

Optional winch drive
Glue the coupling into the reel sides 456 and 457 Glue in the drum 458 as above. Drill 4mm holes for a screwdriver into the drum according to the threads in the coupling.
Insert the ball bearing into winch bearing 453. Remove the rectangle from parts 451 and 452.
Glue the winch bearings into the winch foundation 448. Glue the hydraulic motors 462 in place. Paint the winch and reel. Mount the reel either with the shaft or with the geared motor.
Mount support 463 and indicator lamp 464. The hydraulic lines are not shown. They can be mounted on the basis of the picture itself. Use black 1mm cable.
Mount the entire winch assembly on the crane tube 395.
In the lower area of the inner crane tube 395, remove all protrusions and glue in the swivel bearing 427.
Glue the pivot bearing 427 into the crane tube.

crane boom
The crane jibs can be built movable with gear motors.
The middle cylinders serve the geared motors for lifting and lowering. If you want to build the crane without drive, the middle cylinders and geared motors can be omitted. The reel 394 is glued to the upper crane tube 395 instead of the two middle bearings 425 only when the middle cylinder for the crane drive is not used.
Another possibility is to retrofit the crane with gear motors later.
No changes need to be made to the jib itself, see above.
Glue the side bearing plates 476 flush with the inside of the jib sides 469.
First glue the boom from parts 469 - 471 and 479 together. For alignment, insert the jib between the spherical plain bearings 399 on the upper crane tube. The jib parts are fixed with the aid of bearings 473 to 475.

Glue the bearing blocks 478 into part 477 and glue them from below to parts 476.
The front lower plate 480 can be divided. It has an engraving. The rear part is glued in for the assembly or repair of the front geared motor/hydraulic cylinder only with a removable adhesive, e.g. Fixogum. Glue the front part firmly together. Glue the reinforcements 472 to the side.
The hydraulic cylinders (dummies) are made of brass and aluminium tubes. Glue the large eyelets 490 into the cylinders 485 and 487. Glue the small eyelets 489 into the piston rods 486 and 488.
The hydraulic cylinders are mounted to the boom with M2 threaded rods and M2 nuts.
The cylinders are mounted on the crane tube with M2 bolts and nuts. The cylinders 487 are fixed to the boom and to the folding arm with M2 threaded rods and nuts.
When installing the drive, the piston rods 486/489 are fastened with M2 screws in the rotary motor bearing.

Make the small winch platform 491 and the cover 492 out of the etched parts, as well as the winch out of the parts 493- 499 according to the drawings on plan 04.
Glue the platform to the bracket 471. Place the foot plates 514 on the railing supports 515 and glue them into the holes of the outrigger 471 and the platform 491. Thread the stainless steel cable 516 through and glue it to the railing supports.

Assemble the Whip boom from parts 517-526.
Glue the parts 538-541 together and chamfer them (see plan 04).

Glue the pulleys 529-531 together and press in two ball bearings 532. Mount the pulleys with the shafts 533 and nuts 484. The pulleys must rotate very easily.

Screw the two small pulleys 536 on the bracket 541 slightly turning. Ball bearings are unfortunately not possible here. However, this crane part will probably always be a dummy.
Mount the Whip boom on the main boom with the hydraulic cylinder dummies. In addition the gear motor and the spindle cylinders contained in the 4.1217 kit can be installed.
Pull the cables through the holes in part 396, 395 and tube 81. Through the window opening of door 87 on part 395 the rotating part of the crane can be fixed to the tube with glue.
Paint the crane yellow RAL1003.

Installation of the VSP
Saw off the wings to 5mm. The VSP would otherwise protrude under the ship's base.
The cavitation plate is not required for this installation position.
Press the sealing cord evenly into the edge of the mounting ring.
Insert the VSP and screw it in evenly. Carefully tighten the screws in circles, not crosswise.
Mount the servos.
Screw the threaded rods firmly into the aluminium ball heads. Unscrew the clevises and click them into the servo arms.
Adjust VSP center
Press the white centering bushing into the guide tube of the VSP. Set the servos to the centre using the remote control. Fasten the aluminium ball joint to the control lever using the Inbus screw M2x14, twisting the aluminium ball joint with the threaded rod in the fork head so that it can be screwed on tension-free without loading the servo. Leave your remote control switched on during the adjustment process so that the servos remain in the middle position. However, do not move the control levers, as the centering bush blocks the VSP. Do the same with the second servo.
After setting the correct boom length, remove the centering bush again.
Do the same with the second VSP.
The exact settings can only be made in water. The model should stand still while VSP's are running.

The max. speed of the VSP should be set to approx. 477 rpm.
This corresponds to
7,4V = 65%
6,0V = 80%
This makes the model slightly faster than the original.
Observe the direction of rotation of the VSP, see picture below.
Set the end positions of the servos in such a way that the VSP control lever does not hit the guide tube anywhere (approx. 40%).

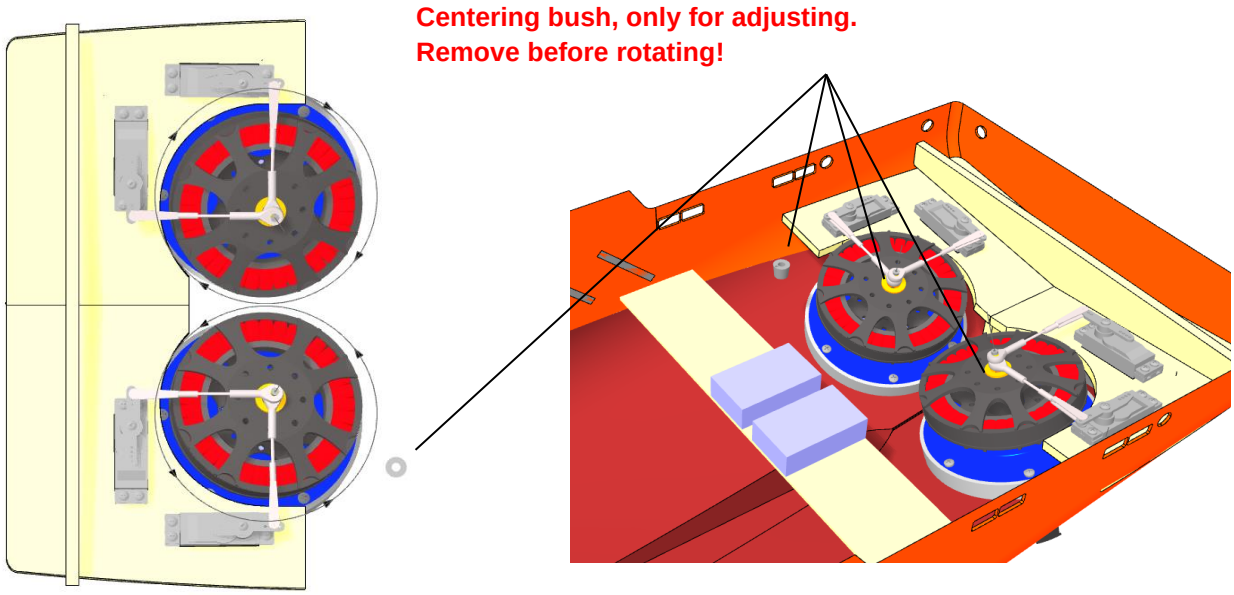

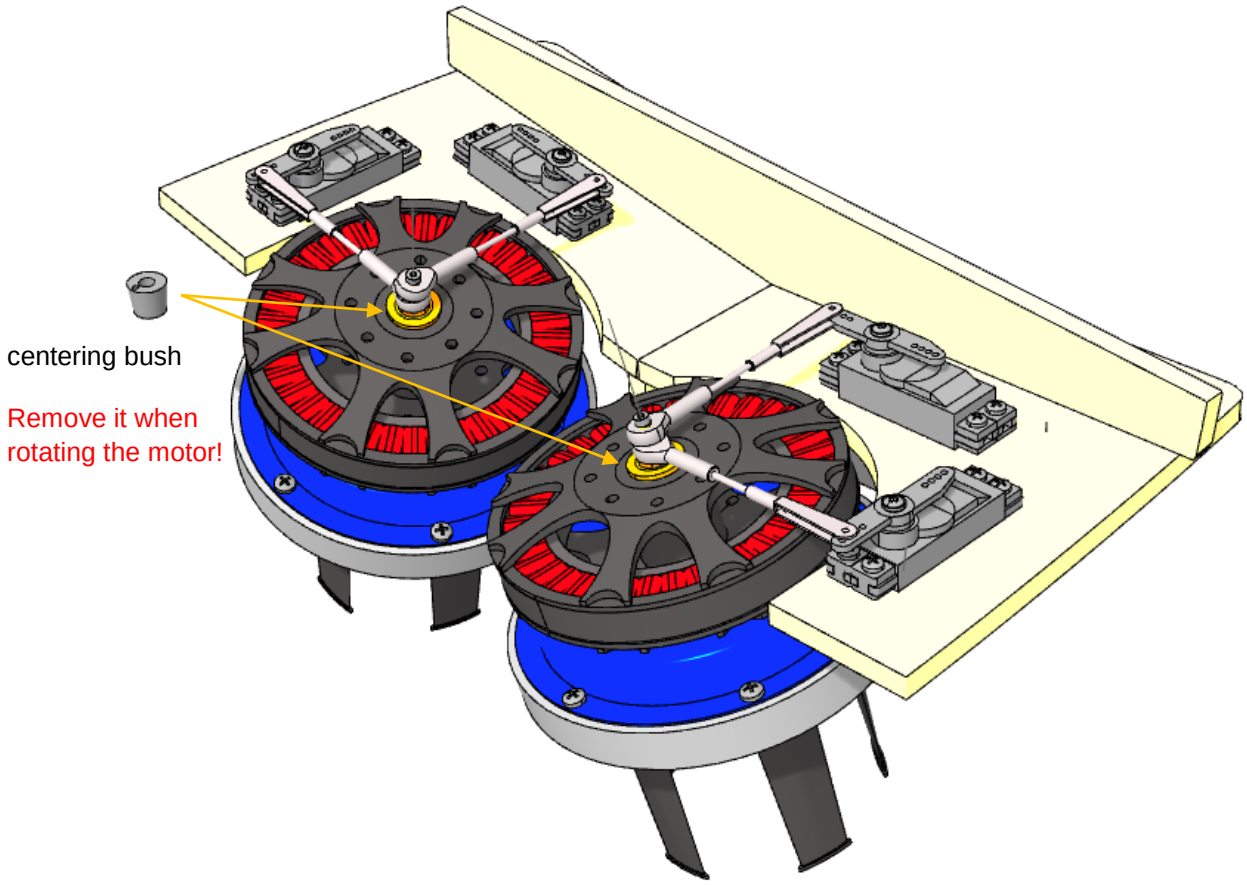

We wish you every success in building the Edda Flora.

We are working on developing the Work-ROV and the OBS-ROV with crane.

These can be retrofitted to your model.

On my own account:
If you have problems with some parts or representations, please let us know. Problems can only be solved by us. Changes and improvements to the construction kit can only be made by us as the manufacturer.

Picture CD:
If you need more detail pictures please mark the corresponding detail on one of the pictures. We can get more detail shots.
The pictures are taken by the ship's command for us. She asks to request pictures about us. We will take care of the corresponding detail pictures.

Accessories:
4.1217 Extension kit crane
1 Work ROV, order no. 4.1218
1 OBS ROV with crane for deck mounting, order no. 4.1219
2 VSP65/5BE
1 VSP-DUO ring limiter for 2 VSPs, if you use no Graupner HoTT mc20 - mc32
2 VSP-Control controllers, order no. No. 4.2359
4 servos 2530, order no. 4.4814
2 Bow thruster 33/40mm, order no. No. 702094
2 motors RM-410, 7,2V, 109-41
2 PowerGrip coupling, 2.3mm, 3mm, spacer13.5mm
2 controllers B-Control VR8, order no. No. 4.4015 (for Bow thruster)
1 drive battery 6-7,4V

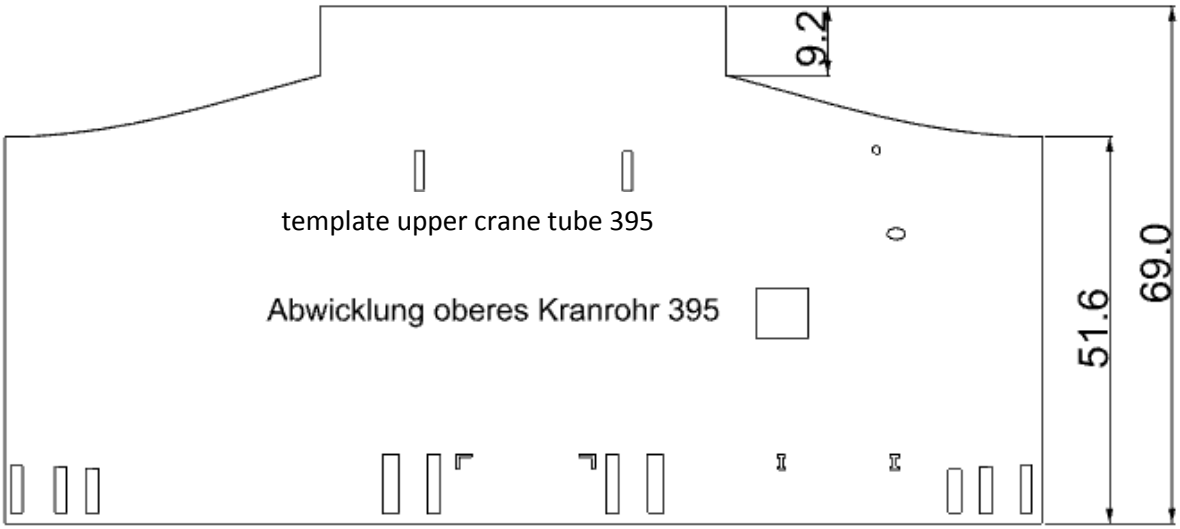
9.2
template upper crane tube 395
Abwicklung oberes Kranrohr 395
51.6
69.0

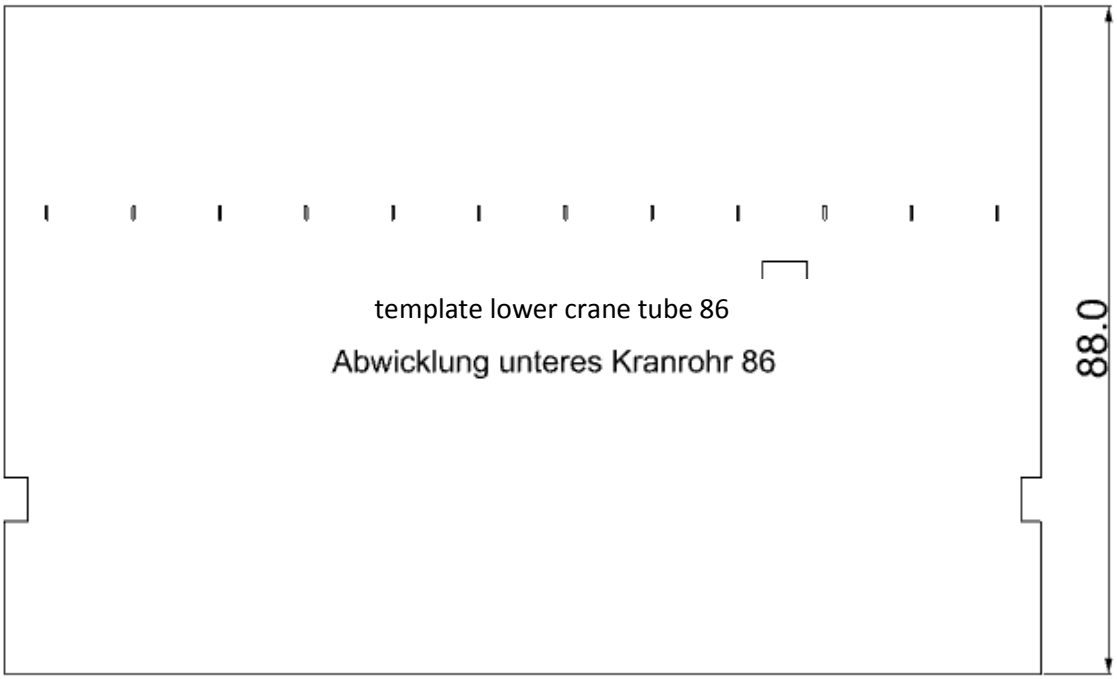
template lower crane tube 86
Abwicklung unteres Kranrohr 86
88.0

No.	naming	number	Plate	Material / Order No.	Remarks
1	Stand /4 strips	1 Set	7	plywood, strip 12x12x500	
2	Grp-hull	1		Grp Epoxy	
3	Anchor bag le / ri	2 Set	1	ABS	
4	Bow thruster	2		702094	Not included
5	Alu angel	2		30x30x150	adapt
5.1	Pine strip	4		20x20x40	adapt
6	Moonpool in front	1	14	Grp part-Milled part, 1,0mm	
7	Moonpool rear	1	14	Grp part-Milled part, 1,0mm	
8	Moonpool Side	2	14	Grp part-Milled part, 1,0mm	
9	Moonpool Flange	1	14	Grp part-Milled part, 1,0mm	
10	Sonar well in front /rear	2	14	Grp part-Milled part, 1,0mm	
11	Sonar well Siden	2	14	Grp part-Milled part, 1,0mm	
12	Sonar carrying rack	1	1	ABS, 1,5mm	
13	Spacer Sonar top	1	1	ABS, 1,5mm	
14	Spacer Sonar middle	1	1	ABS, 1,5mm	
15	Sonar	1	make yourself	Metal, plastic, etc.	Not included
15.1	Winch	1		4.4880 (Bauer-Modelle)	Not included
16	Deck support Main deck	2	8x5x540mm	Brass angel, 774696	cut to size
17	Assistance strip	3	5x7x330mm	Pine strip	cut to size
18	Stop rail for rear panel	2	3x3x107	Pine strip	cut to size
19	centre bar	1	7	Plywood 5,0mm	
20	Servo holder	2	7	Plywood 5,0mm	
21	deck support	1	7	Plywood 5,0mm	
22	Hangar for lifeboat	1		Grp pre-cast	
23	Shaft for gangway left	1	4	ABS 1,5mm	
24	Shaft for gangway right	1	4	ABS 1,5mm	
24.1	Doors for gangway shaft	2	4	ABS 1,0mm	
25	stop for Gangway	4		ABS 3x3x28	cut to size
26	Door Rescue-Hangar	1	4	ABS 1,0mm	
27	Grids for ROV Door	3	4	ABS, 1,0mm	
28	Scharnier	12	14	Grp part-Milled part, 1,0mm	
29	Augensrewn	6		M2 Brass,	
30	Shaft	2	2x150mm	Brass wire,773220	cut to size
31	ROV-Hangar iinside	1	14	Grp part-Milled part, 1,0mm	
32	ROV-Hangar top/below	2	14	Grp part-Milled part, 1,0mm	
33	ROV-Hangar in front /rear	2	14	Grp part-Milled part, 1,0mm	
34	Rails for ROV	2	8x8x140mm	BRASS-U-Profil, 774732	cut to size
34	Fenderrails	10	5x3x500	5x3x48, Brass U-profil	
35	Rubber fender	10	4x3,5x500	Je 48mm, Rubber	cut to size
36	support for Backdeck	2	3x3x 234	Pine strip	cut to size
37	Tube for Portholes	48	7x6x10	ALU-tube 7x6,1x500mm	cut to size

38	Fore deck	1		Grp part	
38.1	Reinforcement Helideck	2		3D print	
39	Mast for TOP/Anchorlicht	2	2	ABS 1,5mm	
40	Lower part shaft	1	2	ABS 1,5mm	
41	Cover	1	2	ABS 1,5mm	
42	Shaft for Mast	1	1,5x15mm	Brass wire	cut to size
43	Maindeck	1		Grp part	
44	Safety rail	2	3x330mm	Plastic rod/ Brass, 3mm	cut to size
45	Safety rail	2		3D print	
46	Bollard stand	18	1	ABS 1,5mm	
47	Bollard tube	12	6x5x15mm	Plastic tube	cut to size
48	Cover with Eyelet	4		Etched parts Edda Flora	
49	disk	12	10	ABS 1,0mm	
50	Rescue hatch	2	10	ABS 1,0mm	
51	hatchback	2	2	Etched parts Edda Flora	
52	Shaft	2	0,5.x4mm	Brass wire 0,5mm	cut to size
53	Handwheel	2	2	Etched parts Edda Flora	
54	Wooden deck	1	13	Plywood, 1,0mm	
55	Servo holder	2	7	Plywood 5,0mm	
56	Linkage lever	2	Not included	Grp part	make yourself
57	Push rod	2	1,0x70	Brass wire	make yourself
58	Stop for Rear panel	1	5x5x250mm	Kst.-Winkelprofil	cut to size
59	Inner bulwarkleft	1	10	ABS 1,0mm	
60	Inner bulwarkre.in front	1	10	ABS 1,0mm	
61	Inner bulwarkre. rear	1	10	ABS 1,0mm	
62	Inner bulwark Rear	1	10	ABS 1,0mm	
63	Handrail inside	2	2m	Winkelprofil, 3x1,5	417-51
64	Handrail outside	2	2m	Abschlussprofil 1,5mm	446-52
65	Bulwark stanchions left	36		Etched parts Edda Flora	
66	Bulwark stanchions right	32		Etched parts Edda Flora	
67	Bulwark stanchions Rear	22		Etched parts Edda Flora	
68	Shaft for Speigate lid	10	1,0x33mm	Brass wire 1,0mm	cut to size
69	Deckhouse Crane	1	2	ABS 1,5mm	
70	Deckhouse Crane	1	2	ABS 1,5mm	
71	Deckhouse Crane	1	2	ABS 1,5mm	
72	Deckhouse Crane	1	2	ABS 1,5mm	
73	Deckhouse Crane	1	2	ABS 1,5mm	
74	Deckhouse Crane	1	2	ABS 1,5mm	
75	Deckhouse Crane	1	2	ABS 1,5mm	
76	Door	1		Etched parts Edda Flora	
77	Winch holder	1	8	Plywood 5mm	
78	Winch	1		4.4880	Not included
79	Towing arm	1	3D print		
80	Threaded rod	2	M4x150	Stahl, verzinkt	cut to size
81	Guide tube	1	10x0,5x165	Alu-Tube	
82	Nuts M4	6	M4		
83	Adjusting collar4,1mm	2	4,1mm		
84	Head plate	1		3D print	
85	Base plate	1		3D print	
86	Cranesocket	1	41x44x88	Plastic tube	
87	Door	3	2	ABS 1,5mm	2-part
88	support for Crane boom	1	Tube	14x1x114mm	
88.1	Base	1	1	ABS 1,5mm	

89	Support	1	2	ABS 1,0mm	
90	Reinforcement ring	1	Tube	16x1x12	
91	Funnel	2	Tube	6x5x6,5mm	
92	Holder for Hook high	1	Tube	6x5x20mm	
93	Holder for Hook low	1	Tube	6x5x20mm	
94	Base	2	2	ABS 1,5mm	
95	Rear panel	1	1	ABS 1,5mm	
96	Rolling gate	1		Plastik-Profil, (Corrugated sheet)	cut to size
97	Window panes	2		PVC smoke-coloured	cut to size
98	Window pane	1		PVC smoke-coloured	cut to size
99	Grids (Rear panel) hullside	1		Etched parts Edda Flora	
100	Grids (Rear panel)	1		Etched parts Edda Flora	
101	Fire main	1	1,2x330	Brass wire	cut to size
102	Junction box down	1	1		
103	Fire box	2	1		
104	Holder	19	1x1X6mm	Brass angel 150mm	cut to size
105	Cable tray	1		Etched parts Edda Flora	
106	Door	4		Etched parts Edda Flora	
107	Doorverschlüsse	5	0,5x10mm	Brass wire 0,5mm	
108	Wall Oxygen store	1	3	ABS 1,5mm	
109	Wall Oxygen store	1	3	ABS 1,5mm	
110	Door Oxygen store	1		Etched parts Edda Flora	
111	Ventilationstube 90°, 3mm	6	3x12mm	Plastic rod , 3mm	
112	Ventilationstube 90°, 2mm	5	2x12mm	Plastic rod , 2mm	
113	Ventilationstube long, 3mm	3	3x45mm	Plastic rod , 3mm	
114	Ventilationstube long, 2mm	1	3x35mm	Plastic rod , 2mm	
115	Ventilationstube long, 1mm	2	1x35mm	Plastic rod , 1mm	
116	Tank nozzle	2	2x13mm	Plastic rod , 2mm	
117	Connectiontube	2	1x22mm	Plastic rod , 1mm	
118	Aerator	1	1	ABS 1,5mm	
119	Drip pan	1		Etched parts Edda Flora	
120	Drip pan	1		Etched parts Edda Flora	
121	Loudspeaker	2		Prefab	
122	Cover	2		Etched parts Edda Flora	
123	Closure screws	4		Etched parts Edda Flora	
124	Basin	1	1	ABS 1,5mm	
125	fender	10	4x3,5x48mm	D-Profil	
126	Fastening flange	3 / 3	11	Etched parts Edda Flora, ABS 0,5mm	
127	Center disc	3	11	0,5mm ABS	
128	Cranesocket	3		Plastic tube 8x6x8mm	
129	lower Swivel ring	3		Etched parts Edda Flora	
129.1	Between Flange	3	11	0,5mm ABS	
130	Superior Swivel ring	2		Etched parts Edda Flora	
131	Crane column, Side	6	11	0,5mm ABS	
132	Crane column	3	11	0,5mm ABS	
133	Hydraulic motor	3		Plastic rod 3x5,5mm	make yourself
134	Hinge pin	18	various lengths	Brass wire 1,0mm	cut to size
135	Lifting arm	3	11	0,5mm ABS	
136	Lifting arm, Side	3	11	0,5mm ABS	
137	Reinforcement	6		Etched parts Edda Flora	
138	Boltcover	24		Etched parts Edda Flora	

139	Intermediate bearing	6	11	0,5mm ABS	
140	Folding arm	3	6x3x43mm	Square profile	
141	Head plate	3		Etched parts Edda Flora	
142	Rope drum bearing	6	11	0,5mm ABS	
143	Reinforcement	3	11	0,5mm ABS	
144	Disc	6	11	0,5mm ABS	
145	Drum	6	11	0,5mm ABS	
146	Push cylinder	3	2x1x38	Plastic tube 2x1	cut to size
147	Piston rod	3	1x38mm	Brass wire 1,0mm	Rectangular profile
148	Push cylinder	3	2x1x40	Plastic tube 2x1	cut to size
149	Piston rod	3	1x43mm	Brass wire 1,0mm	cut to size
150	Thrust part	3	4x2x43mm	Square profile	Fit to 140
151	Head plate	6		Etched parts Edda Flora	
152	Head plate for Hook	3		Etched parts Edda Flora	
153	Operating panel	6	4	ABS 1,5mm	
154	Swivel ring with Seatgestell	1		Etched parts Edda Flora	
155	Seat	1	1	ABS 1,5mm	
156	Reling support Backdeck Side	44		Etched parts Edda Flora	
157	Reling support Backdeck rear	22		Etched parts Edda Flora	
158	Folding rail long	2		Etched parts Edda Flora	
159	Folding rail short	24		Etched parts Edda Flora	
159.1	Grids			Plastic grids	cut to size
160	Iwithation Hydraulik cylinder	28	15x0,5mm	Brass wire 0,5mm	
161	Reling support Crane socket	9		Etched parts Edda Flora	
162	Carriages Side	2	2	1,5mm ABS	
163	Strut	3	2	1,5mm ABS	
163.1	Connecting plate	1	2	1,5mm ABS	
164	Shaft	1	2x58mm	Brass wire	
165	Pulley	2	2	1,5mm ABS	
166	Pulley	4		Etched parts Edda Flora	
167	Ball bearing 2x5x2,5mm	4		2x5x2,5 2RS	Stainless steel
168	Srew M2x8	4		Inbus size 1,5	Stainless steel
169	Nut M2	8		SW 4,5	Stainless steel
170	Craneside	2	2	1,5mm ABS	
171	Strut	2	2	1,5mm ABS	
172	K-Strut	2	2	1,5mm ABS	
173	Front strut	2	2	1,5mm ABS	
174	Hydraulik cylinder1	2	2x1x22mm	Plastic tube 2x1mm	cut to size
175	Piston rod	1	1,0x90mm	Brass wire 1,0mm	cut to size
176	Hydraulik cylinder2	2	2x1x14mm	Plastic tube 2x1mm	cut to size
177	Piston rod	2	1,0x90mm	Brass wire 1,0mm	cut to size
178	Hydraulik cylinder3	2	2x1x9mm	Plastic tube 2x1mm	cut to size
179	Piston rod	2	1,0x90mm	Brass wire 1,0mm	cut to size
180	Hydraulik cylinder4	2	3x1x31mm	Plastic tube 3x1mm	cut to size
181	Piston rod	1	1,0x90mm	Brass wire 1,0mm	cut to size
182	Side	2	2	1,5mm ABS	
183	Strut in front / rear	2	2	1,5mm ABS	
184	Shaft	1	1,0x12mm	Brass wire 1,0mm	
185	Reel carrier	2	2	1,5mm ABS	
186	Front plate	1	2	1,5mm ABS	

187	Spacer plate	1	2	1,5mm ABS	
188	Connection part	1	2	1,5mm ABS	
189	David side	4	1	1,5mm ABS	
190	Connector in front /rear	2	1	1,5mm ABS	
191	Connector Top /down	2	1	1,5mm ABS	
192	Head plate	1	1	1,5mm ABS	
193	upper Pivot bearing			Etched parts Edda Flora	
194	lower Pivot bearing			Etched parts Edda Flora	
195	Pivot bearing			Etched parts Edda Flora	
196	Shaft	4	8mm	Brass wire 0,8mm	cut to size
197	Cranehook			Not included	make yourself
198	Hydraulik cylinder		2x1x17mm	Plastic tube 2x1mm	cut to size
199	Piston rod		0,8x30mm	Brass wire 0,8mm	cut to size
200	Rescue boat	1		Resin	
200.1	Guardrail for Jet	1		Etched parts Edda Flora	
201	Seat / Engine cover	1		Resin	Not included
202	Mounting device	1		Etched parts Edda Flora	
203	Closure			Etched parts Edda Flora	
204	Shaft	2	1,0x14mm	Brass wire 1,0mm	
205	base	2		Etched parts Edda Flora	
206	Middle Border	2		Etched parts Edda Flora	
207	Rear Border	2		Etched parts Edda Flora	
208	Reling support Stair	8		Etched parts Edda Flora	
209	Reling support socket	14		Etched parts Edda Flora	
210	Holder in front	2		Etched parts Edda Flora	
211	Holder Withte	2		Etched parts Edda Flora	
212	Holder rear	2		Etched parts Edda Flora	
213	Rungs	12 / 16	1,0x6, 1,0x12	Brass wire 1,0mm	
214	Stair	2		Etched parts Edda Flora	
215	Handrail	2	0.8x170mm	Brass wire 0,8mm	cut to size
216	Pull-through	4	0.5x350mm	Brass wire 0,5mm	cut to size
217	Life raft	6	19x10mm	Prefab	
218	Support	4	2x2x32mm	PlasticVierkant 2x2mm	
219	Gangway			Etched parts Edda Flora	
220	Steps			Etched parts Edda Flora	
221	Reling Support	28		Etched parts Edda Flora	
222	Handrail	4	0.8x110mm	Brass wire 0,8mm	
223	Pull-through	6	0,3x 125	Stainless steelseil 0,3mm	
224	Base plate	2		Etched parts Edda Flora	
225	Beam	2		Etched parts Edda Flora	
226	Base plate	2		Etched parts Edda Flora	
227	hinge	8		Etched parts Edda Flora	
228	Reinforcement	2		Etched parts Edda Flora	
229	Reling support socket	6		Etched parts Edda Flora	
230	Srew	2	M2x4	Stainless steel, Schlitz	
231	Nut	2	M2	Stainless steel	
232	Shaft	2	1,0x11mm	Brass wire 1,0mm	
233	bearing	8		Etched parts Edda Flora	
234	Shaft	2	1,0x125mm	Brass wire 1,0mm	
235	Handrail Backdeck		0,8x2000mm	Brass wire 0,8mm	cut to size
236	Pull-through Backdeck		0,5x4000mm	Brass wire 0,5mm	cut to size
237	Superstructure Side	1		1,5mm ABS	

238	Superstructure in front	1		1,5mm ABS	
239	Superstructure rear	1		1,5mm ABS	
240	Superstructure Corners	2	right/ left	3D print	
241	D-Deck inside	1	3	1,5mm ABS	
241.1	Reinforcement	1	5x7x235mm	Pine strip	
242	Entry in front	1	1	1,5mm ABS	
243	Side wall left	1	1	1,5mm ABS	
244	Side wall right	1	1	1,5mm ABS	
245	Midddle wall	1	1	1,5mm ABS	
246	Door	1	1	1,5mm ABS	
247	Staircase Side right	1	1	1,5mm ABS	
248	Staircase rear	1	1	1,5mm ABS	
249	Staircase Side left	1	1	1,5mm ABS	
250	Door	1	1	1,5mm ABS	
251	Door	1	1	1,5mm ABS	
252	Door	1	1	1,5mm ABS	
253	D-Deck rear	1	1	1,5mm ABS	
254	Longitudinal wall	5	5	1,0mm ABS	
255	Transverse wall	5	5	1,0mm ABS	
256	Insidewall	5	5	1,0mm ABS	
257	Floor Konferenzraum	6	6	1,0mm ABS	
258	Lower Wall	1	13	Grp part 0,5mm	
259	Window wall	1	13	Grp part 0,5mm	
260	Window panes	1	smoke-coloured	0,3mm PVC ,	cut to size
261	Conference desk	1	1	1,5mm ABS	
262	Foot	1	1	1,5mm ABS	
263	Tischplate	2	1	1,5mm ABS	
264	Foot	2	2x9mm	2,0mm ABS-Rod	
265	Seat	14	1	1,5mm ABS	
266	Foot	14	2x5mm	2,0mm ABS-Rod	
267	Stair	1		Etched parts Edda Flora	
267.1	Ventilators grids	1		Etched parts Edda Flora	
268	Reling support	26		Etched parts Edda Flora	
268.1	Reling support , schräg	17		Etched parts Edda Flora	
269	Handrail		0,8x600mm	Brass wire 0,8mm	cut to size
270	Pull-through		0,5x1500mm	Brass wire 0,5mm	cut to size
271	Bridge deck	1	4	1,5mm ABS	
272	Reinforcement	1	3	1,5mm ABS	
273	Anti-glare / Wave breaker	1	6	1,0mm ABS	
273.1		2	1	1,5mm ABS	
274	Stair in front	1		Etched parts Edda Flora	
275	support	6	0,5x10mm	Brass wire 0,5mm	
276	Reling Support	70		Etched parts Edda Flora	
277	Handrail		0,8x1500mm	Brass wire 0,8mm	cut to size
278	Pull-through		0,5x3000mm	Brass wire 0,5mm	cut to size
279	Floor Bridge	1	5	1,0mm ABS	
280	Window wall left	1		Grp part 0,5mm	
280.1	Window pane	1	smoke-coloured	0,3mm Plastic ,	cut to size
281	Window wall right	1		Grp part 0,5mm	
281.1	Window pane	1	smoke-coloured	0,3mm Plastic ,	cut to size
282	Window wall rear	1		Grp part 0,5mm	
282.1	Window pane	1	smoke-coloured	0,3mm Plastic ,	cut to size
283	Adhesive template	1	5	1,0mm ABS	

284	Wall	2	5	1,0mm ABS	
285	Sidenwall	4	5	1,0mm ABS	
286	Door	2		Etched parts Edda Flora	
287	Top	2	5	1,0mm ABS	
288	Stair	1		Etched parts Edda Flora	
289	Exhaust wall front / rear	2	5	1,0mm ABS	
290	Exhaust wall Side	2	5	1,0mm ABS	
291	Cabinet left	1	5	1,0mm ABS	
292	Cabinet Exhaust well	1	5	1,0mm ABS	
293	Couch	1	5	1,0mm ABS	
294	Couch table	1	5	1,0mm ABS	
295	Workstation Offshore	1	5	1,0mm ABS	
296	Workstation Kommunikation	1	5	1,0mm ABS	
297	Cabinet right	1	5	1,0mm ABS	
298	Workstation Ship's command	1	5	1,0mm ABS	
299	Seat	4	1	1,5mm ABS	
300	Seatfoot	4	2x9mm	2,0mm ABS-Rod	
301	Posts	7	3x3x78mm	ABS-Vierkanttube	
302	Disc	3	smoke-coloured	0,3mm Plastic ,	cut to size
303	Wheelhouse roof	1	5	1,0mm ABS	
304	Top deck	1	7	1,5mm ABS	
304.1	Reling Support	57		Etched parts Edda Flora	
305	Bulwark Top deck	1	6	1,0mm ABS	
306	Bulwark Top deck	1	6	1,0mm ABS	
307	Bulwark Top deck	1	6	1,0mm ABS	
308	Adhesive template Top deck	1	7	1,5mm ABS	
309	Data recorder	1	6x15mm	6,0mm ABS Rod	
310	Foot	1	2x15mm	2,0mm ABS Rod	
311	Foot	2	3,5x3,5x20mm	BRASS-U-Profil	774714
312	support plate	6		Etched parts Edda Flora	
313	Counterweight	2	2	1,5mABS	
314	Tube	1	2x1x35mm	2,0mm BRASS-Tube	
315	Mast	1	1x60mm	1,0mm Brass wire	
316	Signal lamp head	2	1	1,5mm ABS	
317	Hinge	2	1x5mm	1,0mm Brass wire	
318	Windsackholder	1		Etched parts Edda Flora	
319	Tube	2	2x1x17mm	2,0mm BRASS-Tube	
320	Support	2		Etched parts Edda Flora	
321	Tube	1	2x1x19mm	2,0mm BRASS-Tube	
322	Mast	1	1x76mm	1,0mm Brass wire	
323	Tube for Ball Top / down	2	2x1x8mm	2,0mm BRASS-Tube	
324	Tube for Rhombus Withte	1	2x1x11mm	2,0mm BRASS-Tube	
325	Day signal Rhombus	4		Etched parts Edda Flora	
326	Day signal Ball	8		Etched parts Edda Flora	
327	Lamps mast	2	2x1x47mm	2,0mm BRASS-Tube	
328	Cantilever arm	4	1x12mm	1,0mm Brass wire	
329	Lamp holders	4		Etched parts Edda Flora	
330	Gusset	4		Etched parts Edda Flora	
331	Mast	2	2x1x105mm	2,0mm BRASS-Tube	
332	Climbing iron	22	1x7mm	1,0mm Brass wire	
333	Support	4	1x42mm	1,0mm Brass wire	
335	Support	2	1x16mm	1,0mm Brass wire	

336	Lampenholder	12		Etched parts Edda Flora	
337	Lampe rot	8	2x2mm	2,0mm ABS Rod	
338	Lampe weiß	4	2x2mm	2,0mm ABS Rod	
339	Ventilationssbridge	1	1	3D print	
340	Rear panel	1	6	1,0mm ABS	
341	Abgashaus left	1		3D print	
342	Rear panel	1	6	1,0mm ABS	
343	Generatorhaus right	1		3D print	
344	Rear panel	2	6	1,0mm ABS	
345	support	6	4x1x100mm	4,0mm BRASS-Tube	Adjust length
346	Ventilators grids	1		Etched parts Edda Flora	
347	Door	4		Etched parts Edda Flora	
348	Stair	1		Etched parts Edda Flora	
349	Reling support	39		Etched parts Edda Flora	
350	Pull-through	2	ca. 1000mm	0,5mm Brass wire	
351	Handrail	1	ca. 300mm	0,8mm Brass wire	
352	Radar carrier	1		3D print	
353	Exhaust tube	3		5mm, PlasticTube	n.Z. make yourself
354	Exhaust tube	2		2mm Plastic rod	n.Z. make yourself
355	Exhaust tube	6		1mm, Brass wire	n.Z. make yourself
356	Exhaust tube	4		9mm PlasticTube	n.Z. make yourself
357	Ladder with Cage	3		Prefab Plastic	
358	Lashings	3		Etched parts Edda Flora	
359	Guy ropes	3	3x60mm	Stainless steelseil, 0,3mm	
360	Radar	3		From leftovers according to drawing make yourself	
361	Radar foot	3	14, 18.5, 36mm	3,0mm ABS Tube	
362	Radome platform			3d print	
363	Radom 30mm	1		3d print	
364	Radom 20mm	1		3d print	
365	Mast	1	2x1x61mm	BRASS-Tube	
366	Foot	1		Etched parts Edda Flora	
367	Aerial	1		Etched parts Edda Flora	
368	Foot	1	2x1,1x18mm	2,0mm BRASS-Tube	
369	Support	1		Etched parts Edda Flora	
370	Holder for Lifebelts	2		Etched parts Edda Flora	
394	Rope reel	1	3-teilig	Etched parts Crane	
395	Crane tube Top	1	41x44x69	Plastic tube	
395.1	upper Swivel	1	12	1,5mm ABS	
396	Bearing plate	1	12	1,5mm ABS	
397	Bearing plate	1	12	1,5mm ABS	
398	Cover	1	12	1,5mm ABS	
399	Pivot bearing	4	12	1,5mm ABS	
400	socket down	1		Etched parts Crane	
401	Support bracket	12		Etched parts Crane	
402	Ladder	1		Etched parts Crane	

403	Cage	1		Etched parts Crane	
404	Crane cab	1		Etched parts Crane	
405	Disc	1	smoke-coloured	0,15mm PVC	make yourself
406	Door	1		Etched parts Crane	
407	Air conditioning	1	12	1,5mm ABS	
408	Switchboard	1	12	1,5mm ABS	
409	socket Crane cab	1		Etched parts Crane	
410	Double T-beam	2	2x1x29	cut to size	774958
411	Double T-beam	1	2x1x31	cut to size	774958
412	Double T-beam	1	2x1x21	cut to size	774958
413	Longitudinal beam, Brass angel	2	2x1x40	cut to size	774658
414	Security cage	1	1,5x500mm	cut to size, bending	Brass wire 1,5
415	Security cage	1	1,0x500mm	cut to size, bending	Brass wire 1,0
416	Flange	1		Etched parts Crane	
417	Flange	1		Etched parts Crane	
418	Reling	1		Etched parts Crane	
419	Ladder	1		Etched parts Crane	
420	Security cage	1		Etched parts Crane	
421	Reling	1		Etched parts Crane	
422	Reling	1		Etched parts Crane	
423	Reling support	1		Etched parts Edda Flora	
424	Bearing tube	1	4x3,1x33mm	BRASS-Tube	
425	Bearing for Zylinder	6	12	1,5mm ABS	
426	Bearing for Support	4	12	1,5mm ABS	
427	Swivel	1		3D print	
428	Longitudinal beam	2	2x2x70	Brass angel	cut to size
429	Cross beam	4	2x2x60	Brass angel	cut to size
430	Platform			Etched parts Crane	
431	Radiator	5	2	1,5mm ABS	
431.1	Radiator slats	10	18x15mm	Plastik-Profil, (Corrugated sheet)	cut to size
432	Reling			Etched parts Crane	
433	Hydraulic reservoir	25	3x1x24mm	PlasticTube 3x1mm	cut to size
434	Connection	50	1x5mm	Plastic rod	cut to size
435	Fixing plate	2		Etched parts Crane	
436	Support	2	8	1,0mm ABS	
437	X-Strut	1		1,0mm ABS	
438	Strut	2	9	2,0mm ABS	
439	Lashings	4		Etched parts Crane	
440	Longitudinal beam	2	8	1,0mm ABS	
441	Longitudinal angel	3	2x2x17.5	2x2mm Brass angel	cut to size
442	Cross beam	4	2x67x59mm	2x2mm Brass angel	cut to size
443	End plate	1	2	1,5mm ABS	
444	Base plate	1	8	1,0mm ABS	
445	Lashings	2	12	1,5mm ABS	
446	socket	1		Etched parts Crane	
447	Support plate	1	8	1,0mm ABS	
448	Winch foundation	1	8	1,0mm ABS	
449	Reling	1	mehrteilig	Etched parts Crane	
450	Winch foot	2	8	1,0mm ABS	
451	Winch bearing motorseitig	1	9	2,0mm ABS	
452	Winch bearing motorseitig	1	9	2,0mm ABS	

453	Winch bearing bearing seitig	1	9	2,0mm ABS	
454	Reinforcement Top	2	8	1,0mm ABS	
455	Reinforcement down	2	8	1,0mm ABS	
456	Reel outside motorseitig	1	8	1,0mm ABS	
457	Reel inside motorseitig	1	8	1,0mm ABS	
458	Drum	1	20x1,0x18mm	PlasticTube 20x1mm	
459	Reel inside	1	8	1,0mm ABS	
460	Reel outside	1	8	1,0mm ABS	
461	Shaft	1	3x30mm	Brass wire 3mm	
462	Hydraulic motor	8	5x15mm	Plastic rod 5mm	
463	Support	1	1x14mm	Brass wire 1mm	
464	Flashing light orange	1	3x4,5mm	Plastic rod 3mm	
465	Geared motor	1		Prefab	4.1217
466	Coupling	1		Prefab	4.1217
467	Ball bearing	2		Prefab	4.1217
468	Shaft	1	3x30mm	Brass wire 3mm	
469	cantilever arm Side	2	12	1,5mmABS	
470	Reinforcement	2	8	1,0mm ABS	
471	Superiors Plate	1	12	1.5mm ABS	
472	Fore Reinforcement	2	8	1,0mmABS	
473	Bearing tube		4x3,1x32	BRASS-Tube 4x3,1mm	
474	Shaft		M3x40	Threaded rod M3	
475	Nut M3	2		Nut M3, Stainless steel	
476	Bearing plate Side	2	9	2,0mmABS	
477	Bearing plate down	1	12	1,5mm ABS	
478	Bearing bock	4	12	1,5mm ABS	
479	Lower Plate rear	1	12	1,5mm ABS	
480	Lower Plate in front	1	12	1,5mm ABS	
481	Shaft	1	2x22mm	Brass wire	
482	not applicable				
483	Srew	14	M2x8		4.6756
484	Nut M2	2			4.6840
485	Hydraulik cylinder (Dummy)	2	5x4,1x74	BRASS-Tube	
486	Piston rod (Dummy)	4	3x2,1x76	BRASS-Tube	
487	Hydraulik cylinder (Dummy)	2	5x4,1x48	BRASS-Tube	
488	Piston rod (Dummy)	4	3x2,1x48	BRASS-Tube	
489	Eyelet small	4	9	2,0mm ABS	
490	Eyelet big	4	9	2,0mm ABS	
491	Baseplate	2		Etched parts Crane	
492	Cover	1		Etched parts Crane	
493	Winch foundation	1		Etched parts Crane	
494	Winch bearing	2		Etched parts Crane	
495	Reinforcement Top	2		Etched parts Crane	
496	Reinforcement down	2		Etched parts Crane	
497	Reel inside	2		Etched parts Crane	
498	Reel outside	2		Etched parts Crane	
499	Drum	1	10x8x5,4mm	PlasticTube	
500	Shaft	1	1x10mm	Brass wire	
501	Reling	2		Etched parts Crane	
502	Reling	1		Etched parts Crane	
503	Reling	2		Etched parts Crane	
504	Reling	1		Etched parts Crane	
505	Reling	1		Etched parts Crane	

506	Reling	1		Etched parts Crane	
507	Reling	1		Etched parts Crane	
508	Support block	1		Etched parts Crane	
519	Support block	1		Etched parts Crane	
510	Support block	1		Etched parts Crane	
511	Support block	2		Etched parts Crane	
512	Support block	1		Etched parts Crane	
513	Support block in front	1		Etched parts Crane	
514	Base plate			Etched parts Crane	
515	Reling support			Etched parts Crane	
516	Pull-through		2m	Stainless steelseil 0,3mm	cut to size
517	Side plate re.	1	12	1,5mm ABS	
518	Side plate li.	1	12	1,5mm ABS	
519	lower Plate	1	12	1,5mm ABS	
520	superiors Plate	1	12	1,5mm ABS	
521	Lower Bearing plate	1	12	1,5mm ABS	
522	Bearing block	2	12	1,5mm ABS	
523	Superiors Bearing plate	1	12	1,5mm ABS	
524	Bearing block	1	8	1,0mm ABS	
525	Reinforcement down	1	8	1,0mm ABS	
526	Reinforcement Top	1	8	1,0mm ABS	
527	Support	3	12	1,5mm ABS	
528	Reinforcement	1		Etched parts Crane	
529	Pulley	4	9	2,0mmABS	
530	Borddisc	6		Etched parts Edda Flora	
531	Borddisc	2	9	Etched parts Edda Flora	
532	Ball bearing	4	2x5x2,5		
533	Shaft 2mm	8	Adjust length	Threaded rod M2	cut to size
534	Distance plate	1	9	2,0mm ABS	
535	Bearing plate	1	8	1,0mmABS	
536	Pulley	4	7mm		584707
537	Reinforcement / Bearing bock	2	9		
538	Distance plate 1				
539	Distance plate 2				
540	Distance plate 3				
541	Cantilever arm				
542	Stop				
543	weight				
544	Hook small			Etched parts Crane	
545	bouble hook			Etched parts Crane	
546	Crane reel whip		0,27mm	20m rigging yarn	
547	Crane reel main rope		0,72mm	20m rigging yarn	
548					

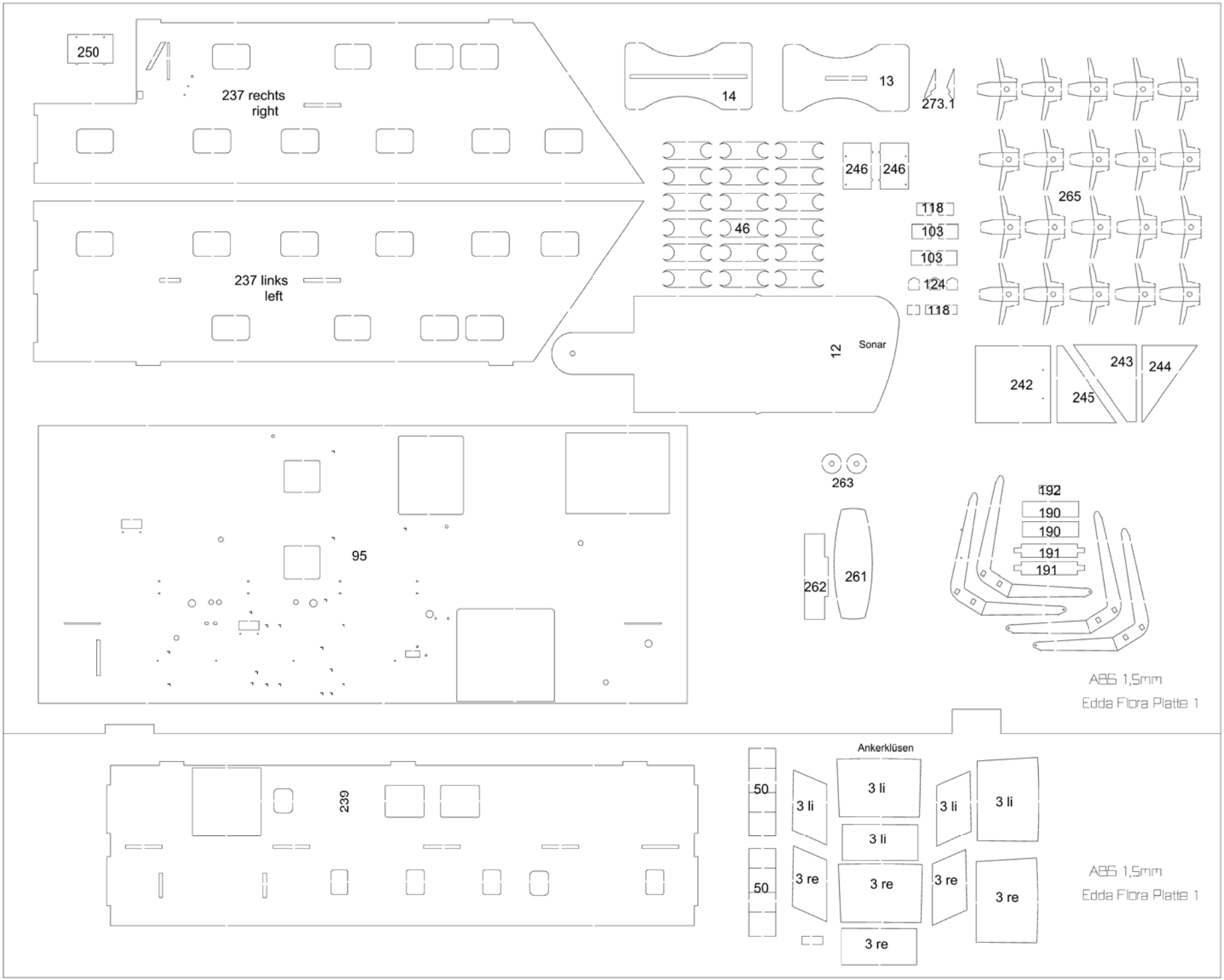
250
237 rechts
right
237 links
left
14
13
273.1
246
246
46
118
103
103
124
118
265
12
Sonar
242
245
243
244
95
263
262
261
192
190
190
191
191
ABS 1,5mm
Edda Flora Platte 1
239
Ankerklüsen
50
50
3 li
3 li
3 li
3 li
3 li
3 re
3 re
3 re
3 re
3 re
ABS 1,5mm
Edda Flora Platte 1

Platte 1.1

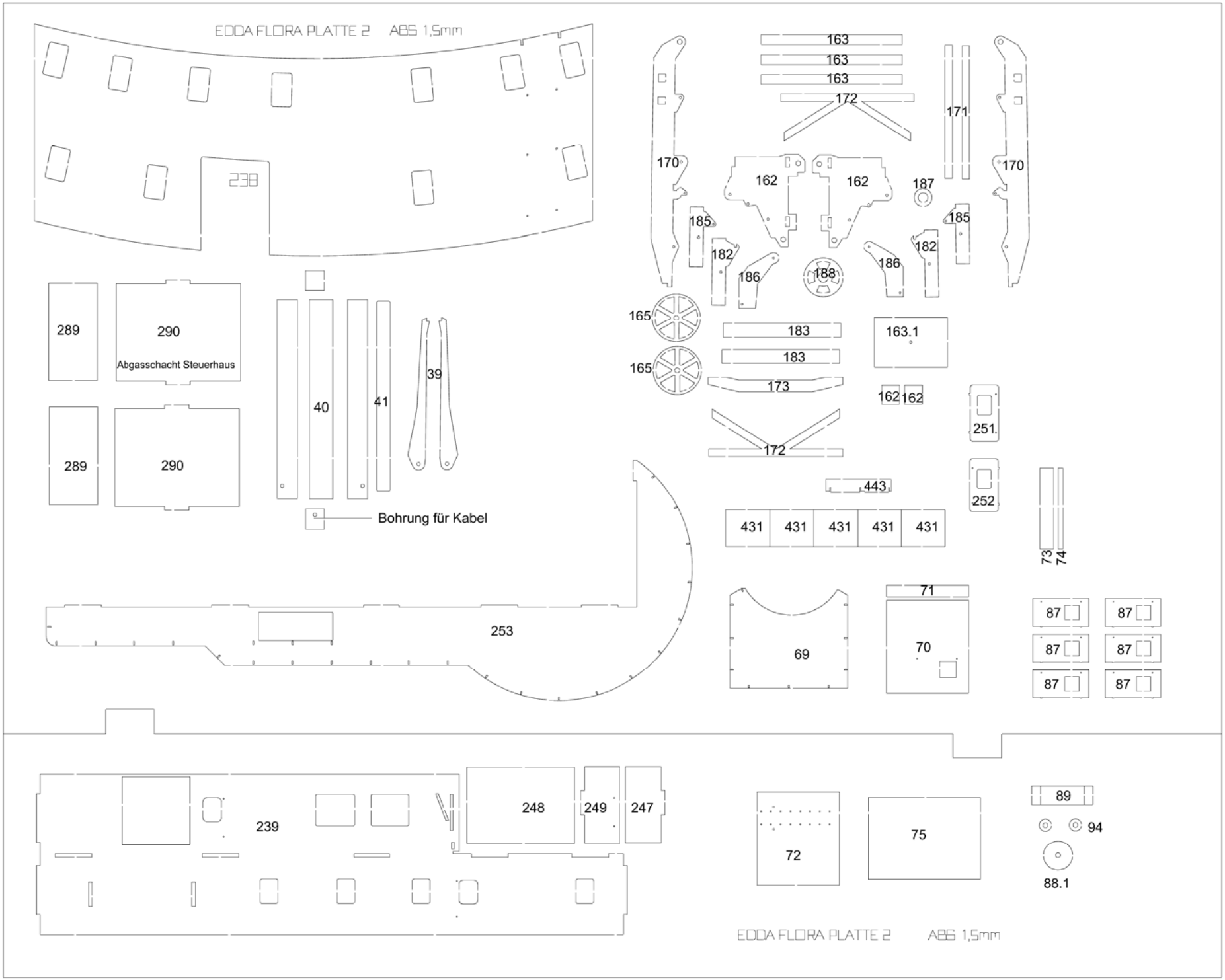
EDDA FLORA PLATTE 2 ABS 1,5mm
238
163
163
163
172
171
170
170
162
162
187
185
185
182
182
186
186
188
165
165
183
183
173
163.1
162
162
251
172
443
252
431
431
431
431
431
73
74
289
290
Abgasschacht Steuerhaus
289
290
40
41
39
Bohrung für Kabel
253
69
71
70
87
87
87
87
87
87
239
248
249
247
72
75
89
94
88.1
EDDA FLORA PLATTE 2 ABS 1,5mm

Platte 2.3

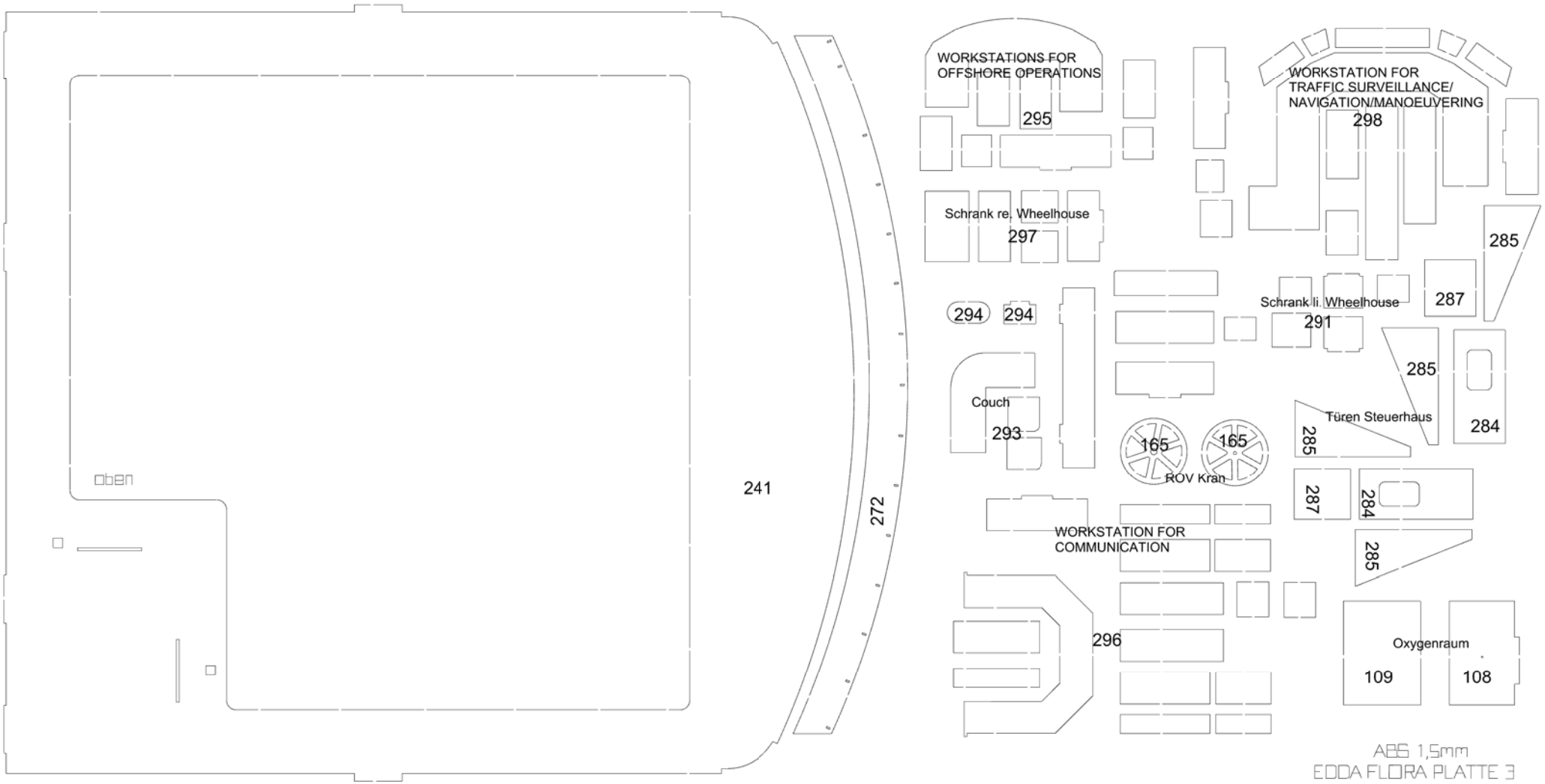
WORKSTATIONS FOR
OFFSHORE OPERATIONS
295
WORKSTATION FOR
TRAFFIC SURVEILLANCE/
NAVIGATION/MANOEUVERING
298
Schrank re. Wheelhouse
297
285
287
Schrank li. Wheelhouse
291
294
294
285
Couch
293
Türen Steuerhaus
284
165
165
285
ROV Kran
287
284
WORKSTATION FOR
COMMUNICATION
285
296
Oxygenraum
109
108
241
272
oben
ABS 1,5mm
EDDA FLORA PLATTE 3

Platte 3.1

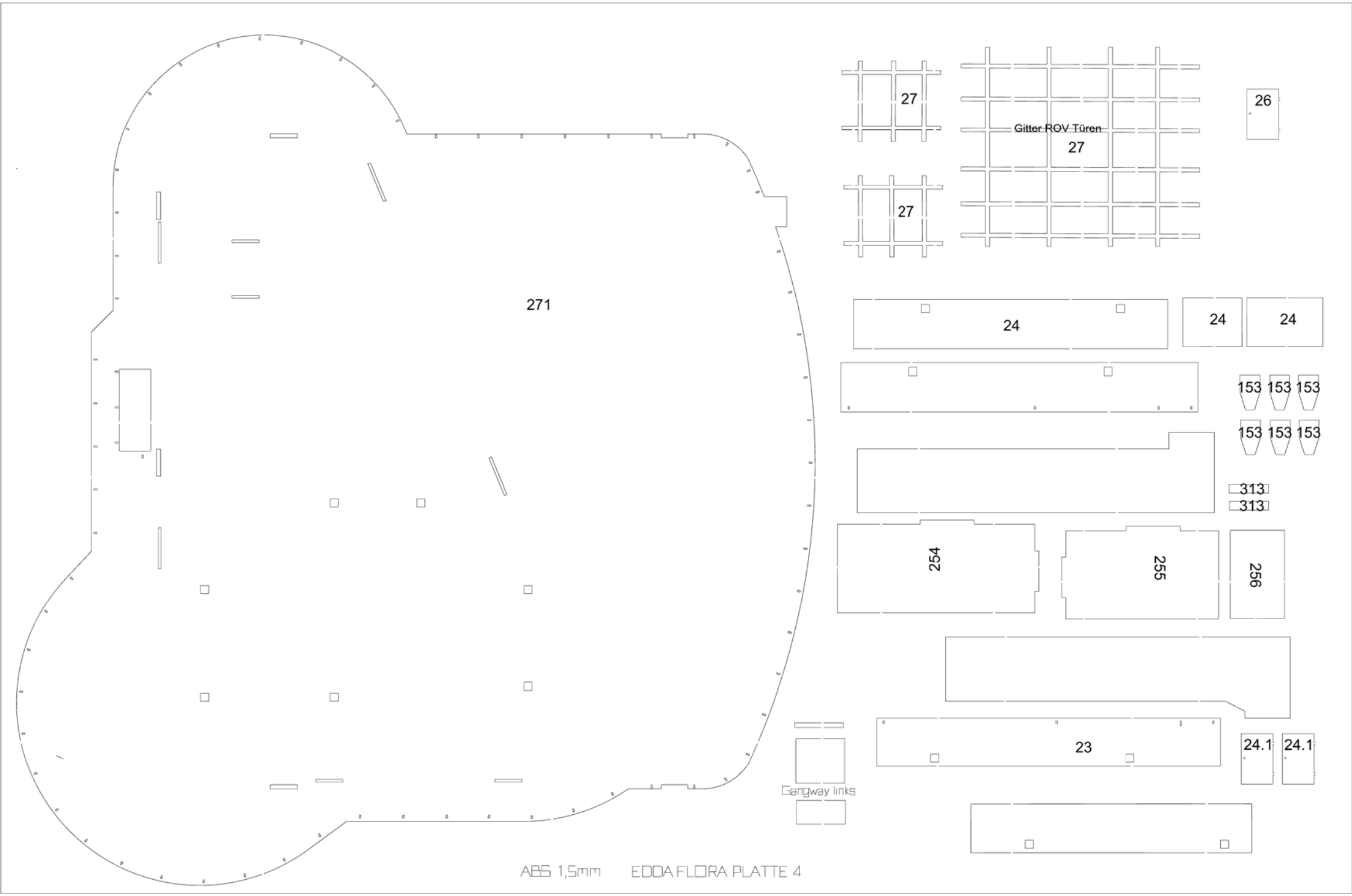
271
27
27
Gitter ROV Türen
27
26
24
24
24
153 153 153
153 153 153
313
313
254
255
256
23
24.1
24.1
Gangway links
ABS 1,5mm
EDDA FLORA PLATTE 4


279 Fußboden Steuerhaus
303
Innendecke Steuerhaus
Biege- und Lötschablone für
Radomfuß groß (rechts)
ABS 1,0mm
EDDA FLORA PLATTE 5

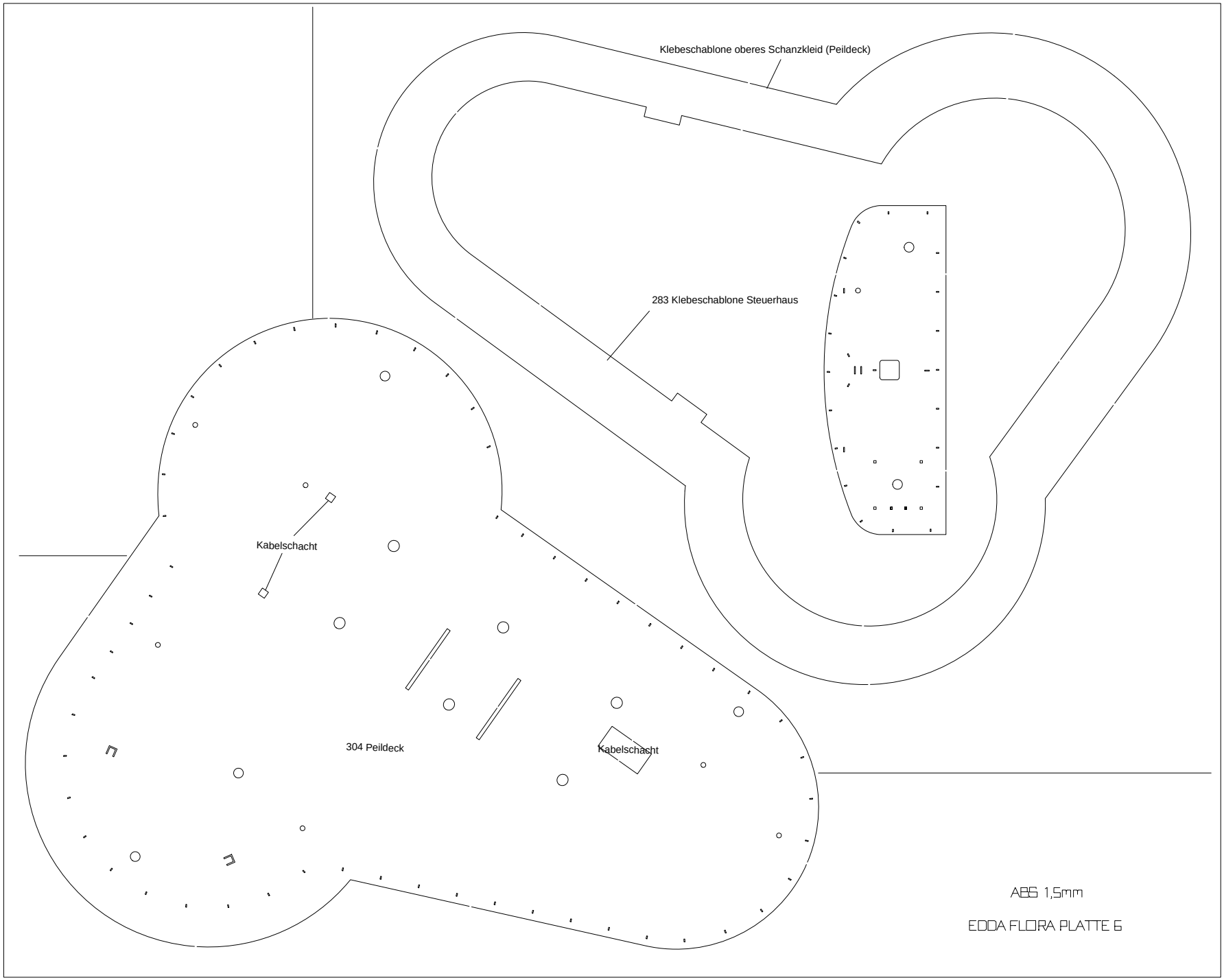
Klebeschablone oberes Schanzkleid (Peildeck)
283 Klebeschablone Steuerhaus
Kabelschacht
304 Peildeck
Kabelschacht
ABS 1,5mm
EDDA FLORA PLATTE 6

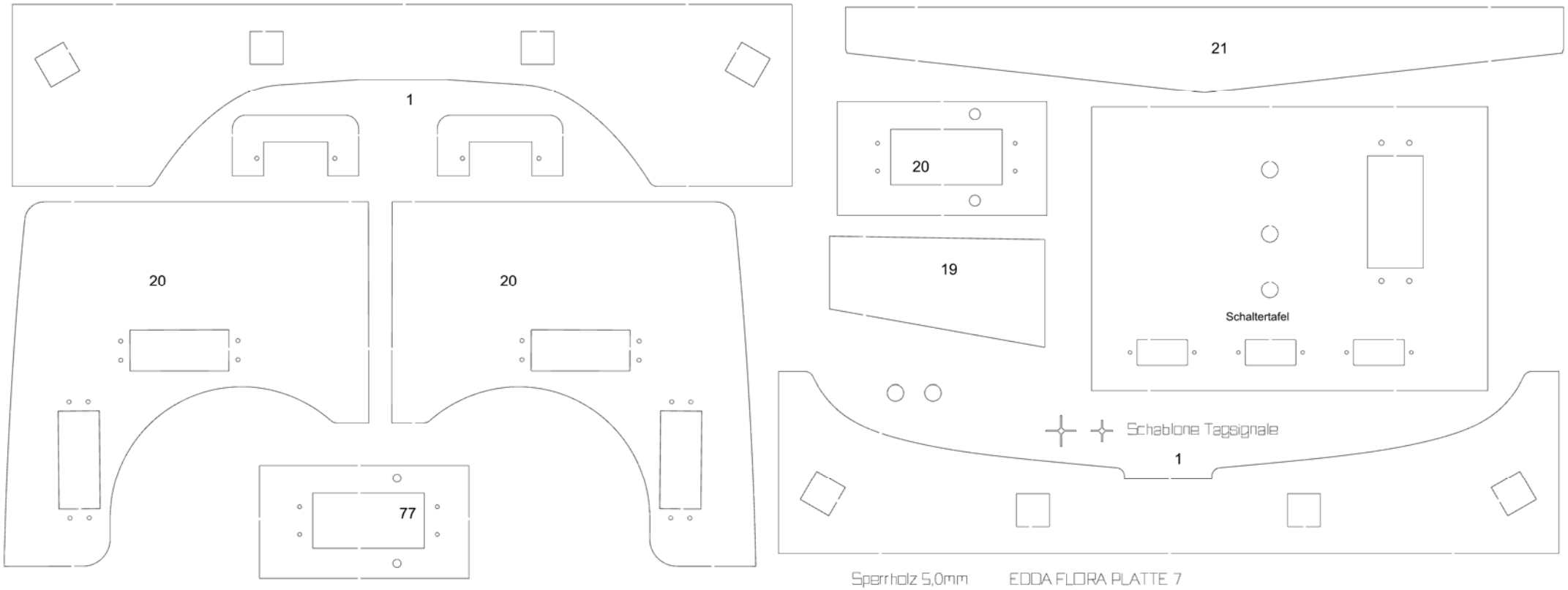

Sperrholz 5,0mm EDDA FLORA PLATTE 7

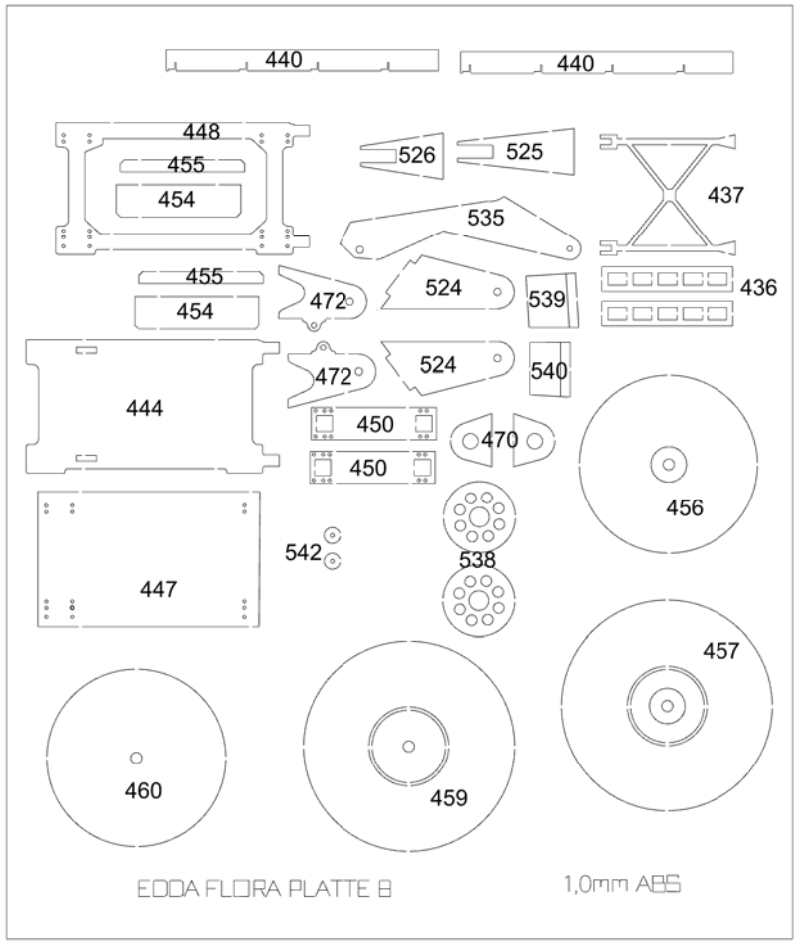
440
440
448
455
454
526
525
437
535
455
454
472
524
539
436
472
524
540
444
450
450
470
456
542
538
447
457
460
459
EDDA FLORA PLATTE B
1,0mm ABS

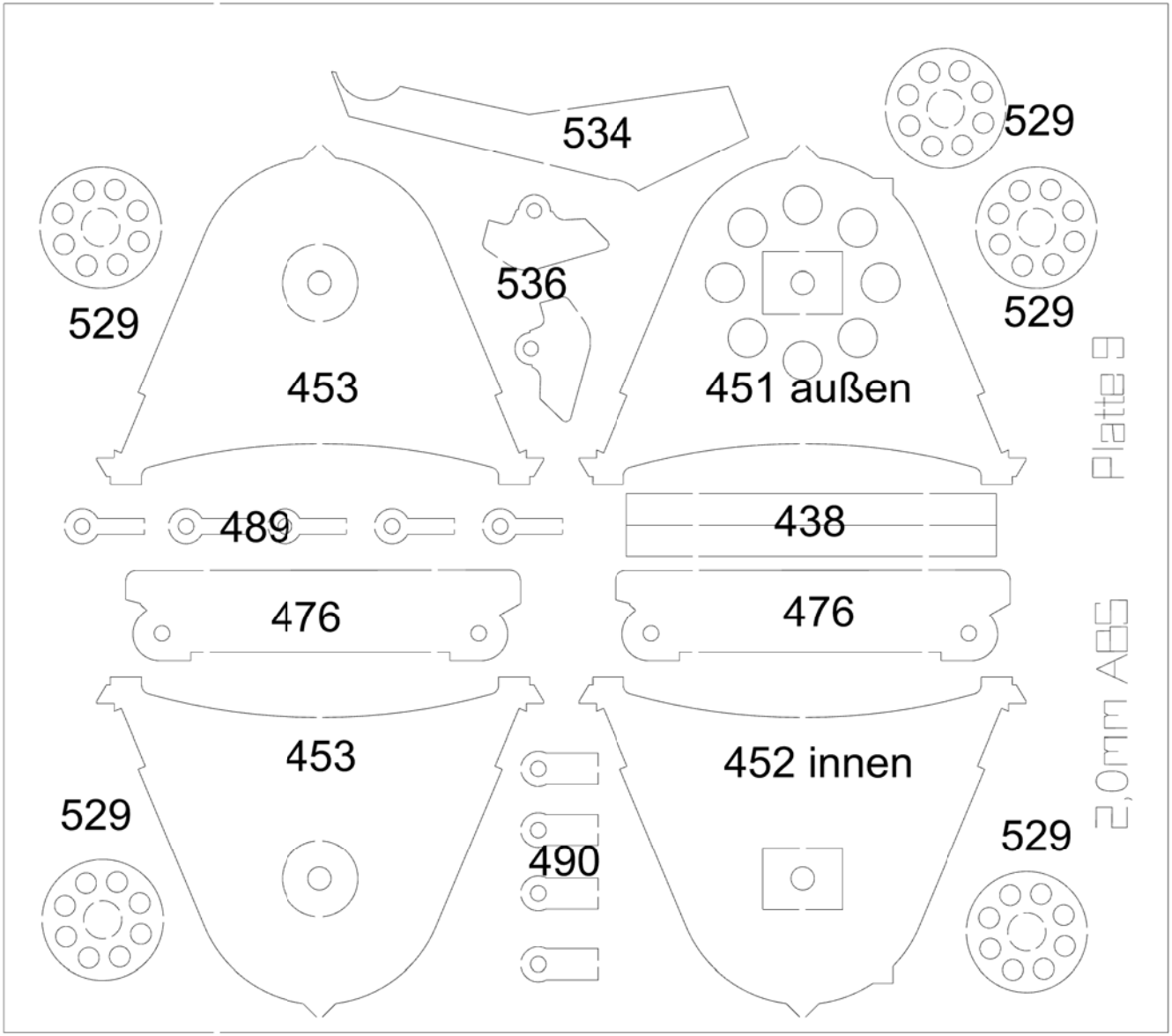
534
529
529
529
536
453
451 außen
Platte 9
489
438
476
476
453
452 innen
2,0mm ABS
529
490
529

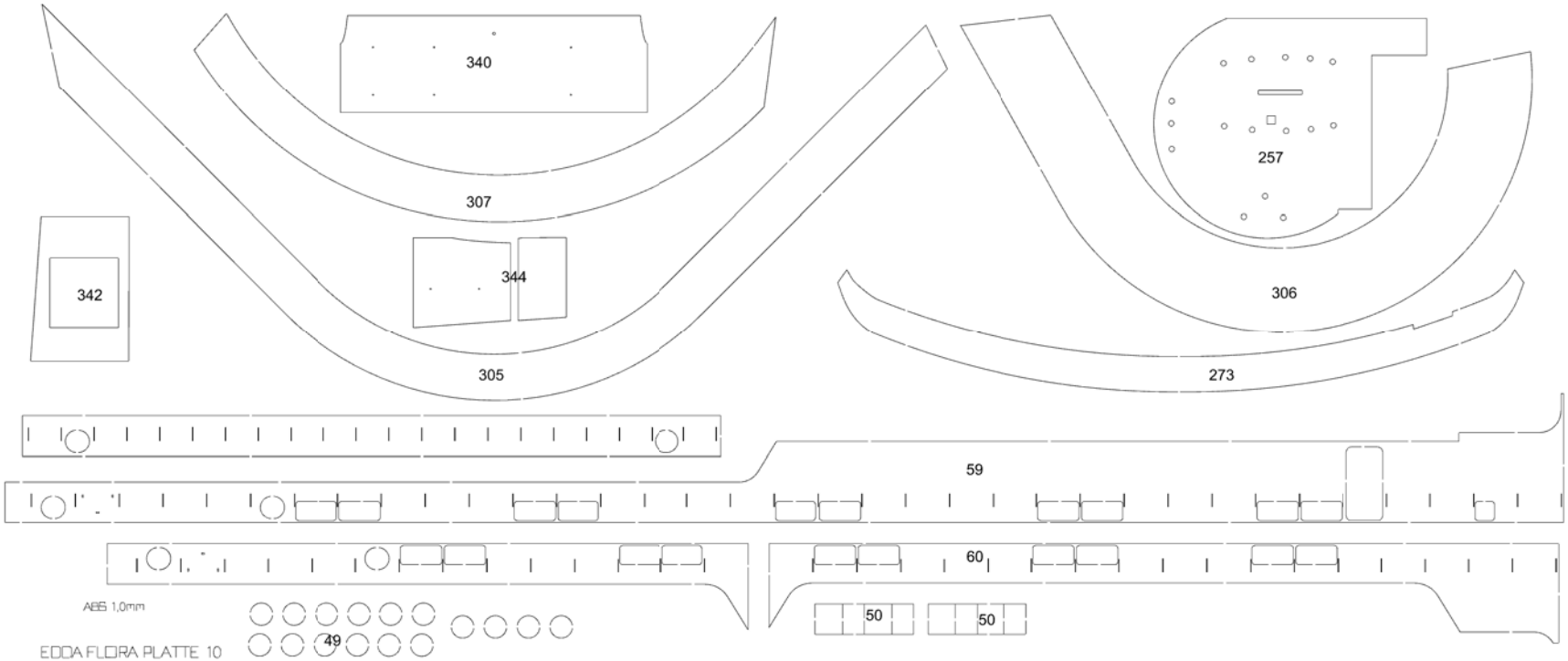
340
307
342
344
305
257
306
273
59
60
50
50
49
ABS 1,0mm
EDDA FLORA PLATTE 10

Reserve

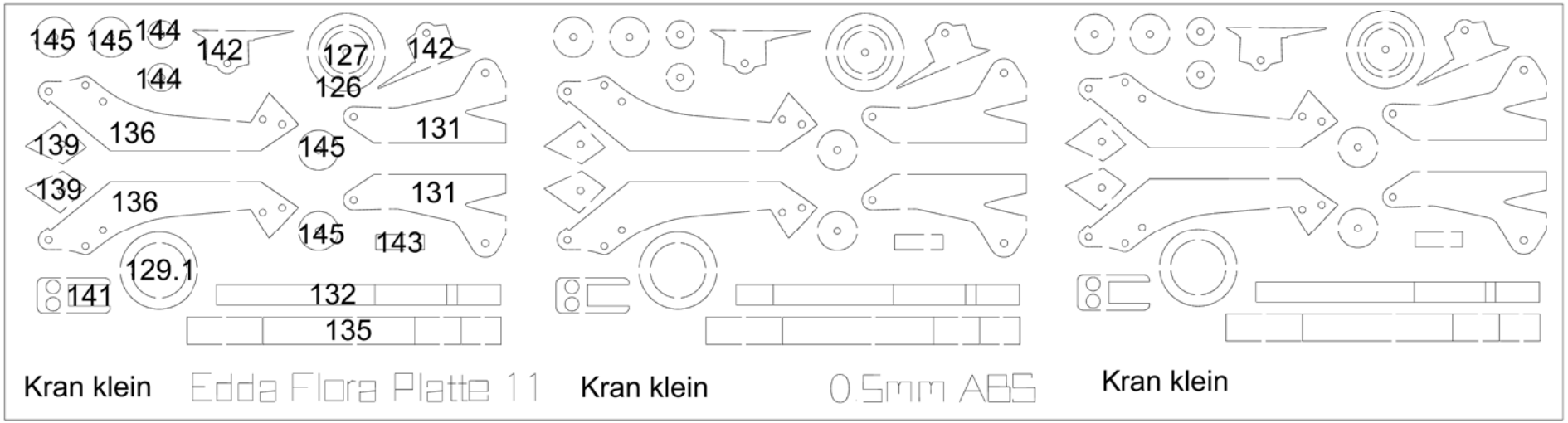
145
145
144
144
142
127
126
142
136
139
145
131
139
136
145
143
131
129.1
141
132
135
Kran klein
Edda Flora Platte 11
Kran klein
0.5mm ABS
Kran klein

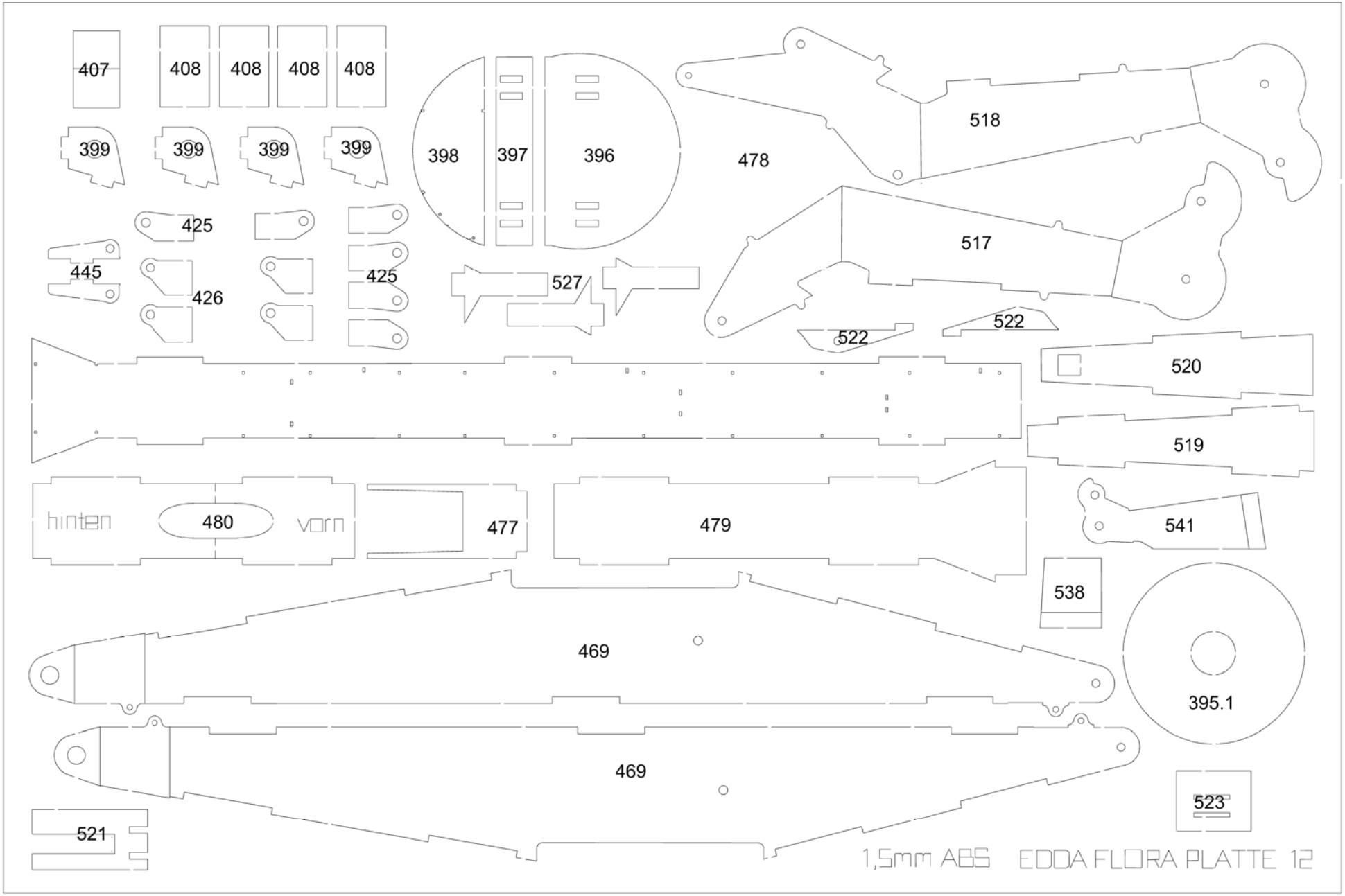
407
408
408
408
408
399
399
399
399
398
397
396
478
518
425
445
426
425
527
517
522
522
520
519
hinten
480
vorn
477
479
541
538
469
395.1
469
523
521
1,5mm ABS EDDA FLORA PLATTE 12

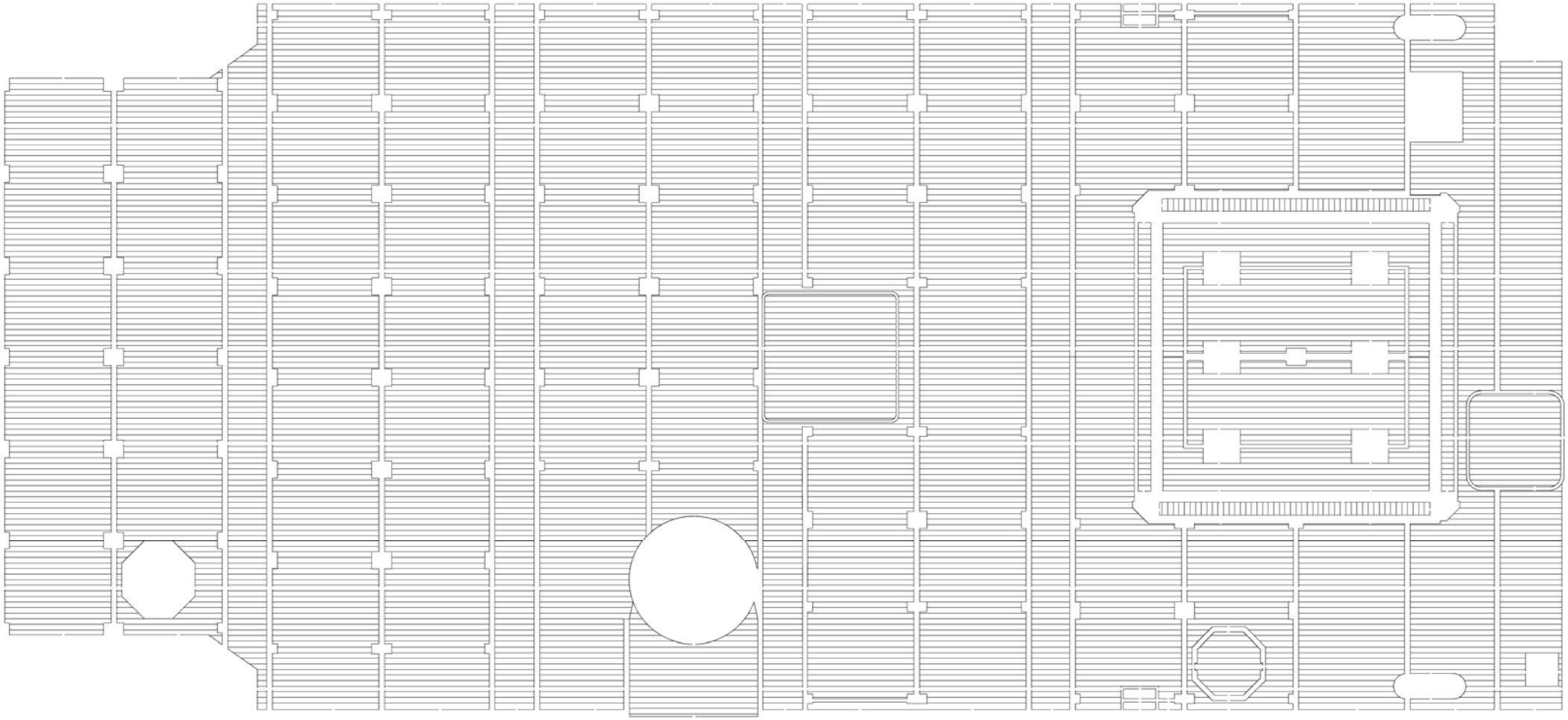

EDDA FLORA PLATTE 13 Sperrholz 1,0mm

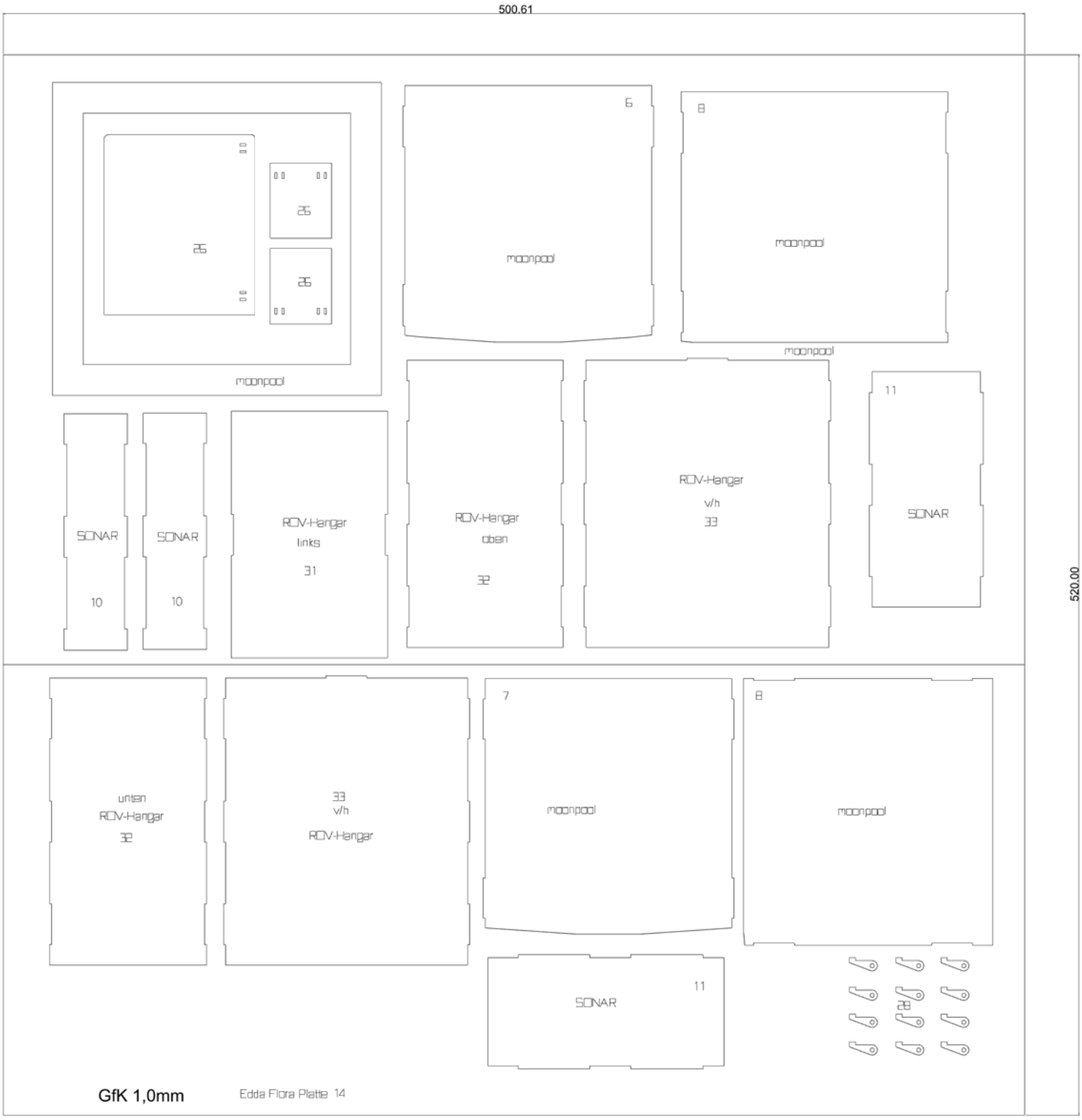
500.61
520.00
26
26
26
moonpool
6
moonpool
8
moonpool
SONAR
10
SONAR
10
ROV-Hangar
links
31
ROV-Hangar
oben
32
ROV-Hangar
v/h
33
11
SONAR
unten
ROV-Hangar
32
33
v/h
ROV-Hangar
7
moonpool
8
moonpool
SONAR
11
28
GfK 1,0mm
Edda Flora Platte 14

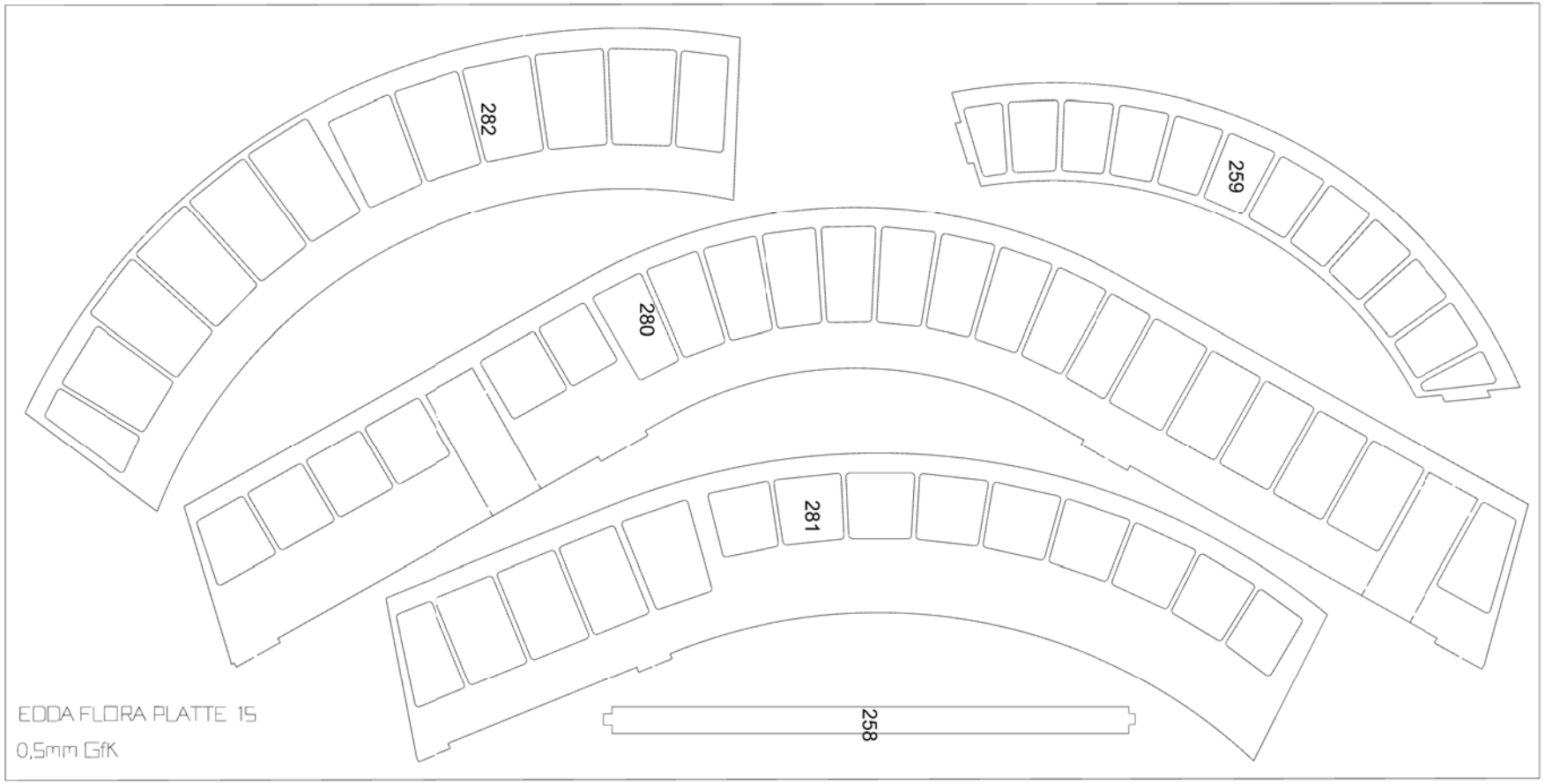
282
259
280
281
258
EDDA FLORA PLATTE 15
0,5mm GfK